Generation 2

November 2025

OMEGA2

COMMERCIAL MULTI-STATION

Serial Number Here

Date of Purchase

BATCA

Instructions

Congratulations on the purchase of your new Batca Omega 2 two stack multi-gym. This gym will provide you with a lifetime of enjoyment to meet your strength training needs. Batca Fitness Systems strives to build the best quality gyms and to package these gyms in such a way to avoid any damage during shipping.

In order to get started with your assembly you should first familiarize yourself with this manual. It is recommended that you read through each step thoroughly before you begin. Begin by opening your boxes and separating all of your parts. Verify that all parts are accounted for and have no damage. When all parts are accounted for, you may begin your assembly. Some items may have been pre-assembled for your convenience. Please note that hardware quantities shown reflect total quantities for your gym and may not reflect actual quantities in each bag. Assemble your gym on a solid level surface. This will ensure the best possible performance, function, and safety for the gym and your workout.

Assemble your gym according to the step by step instructions found in this manual. Failure to do so will void your warranty and may result in personal injury. After assembly, you should check each station to ensure correct operation. If a problem arises, recheck your assembly with these instructions to verify correct assembly. If you are unable to correct a problem or have questions with your assembly please contact your authorized Batca dealer.

Warning

Batca Fitness Systems has built this gym to give you a safe, effective and enjoyable workout. However, there is a risk assumed by individuals who use this type of equipment. It is very important that all warnings and instructions are read and followed before beginning any exercise program.

It is also very important to read and follow the preventative maintenance schedule described in this manual. If any of the warning labels or stickers are worn, faded, torn, scratched or missing they should be replaced immediately.

WARNING: There is a risk assumed by individuals who use this type of equipment. To minimize risk always follow these rules.

1) It is essential that you consult with your physician before beginning any exercise program.
2) Inspect equipment before each use for loose, worn, or frayed parts (including cables, nuts and bolts). Replace parts at first signs of wear (use only genuine BATCA replacement parts). Use of equipment that is damaged, worn, frayed or not completely assembled on a solid, level surface may result in injury.
3) Make sure all adjustment pins are fully engaged before using equipment.
4) Keep all parts of the body and clothing outside the path of any moving parts of the gym. Be alert to the possibility of injury. Do not be careless.
5) Minors and children should not be allowed to play on or around this gym.
6) If you have any questions on proper use or maintenance of this gym, do not hesitate to call your local BATCA FITNESS SYSTEMS distributor or BATCA FITNESS SYSTEMS at (919) 255-1233. www.batcafitness.com

Table of Contents

	Page		Page
Instructions	2	Final Assembly and Troubleshooting	36
Parts Listing	3-7	Cable Tension and Adjustments	37
Main Assembly	8-19, 30	Maintenance	38
Cable Routing	20-25	Warranty	39
Upholstery	26-29	Floor Plan Layout	40
Omega 2 Leg Press Assembly	31-35		

Tools Required

- 9/16” Wrench/Ratchet
- Metric Allen Wrench Set (M8, M6, M4)
- 3/4” Wrench
- Tape Measure
- 1/2” Wrench
- 1/2” Ratchet
- 3/4” Wrench
- Snap Ring Pliers

Hardware Blister Pack

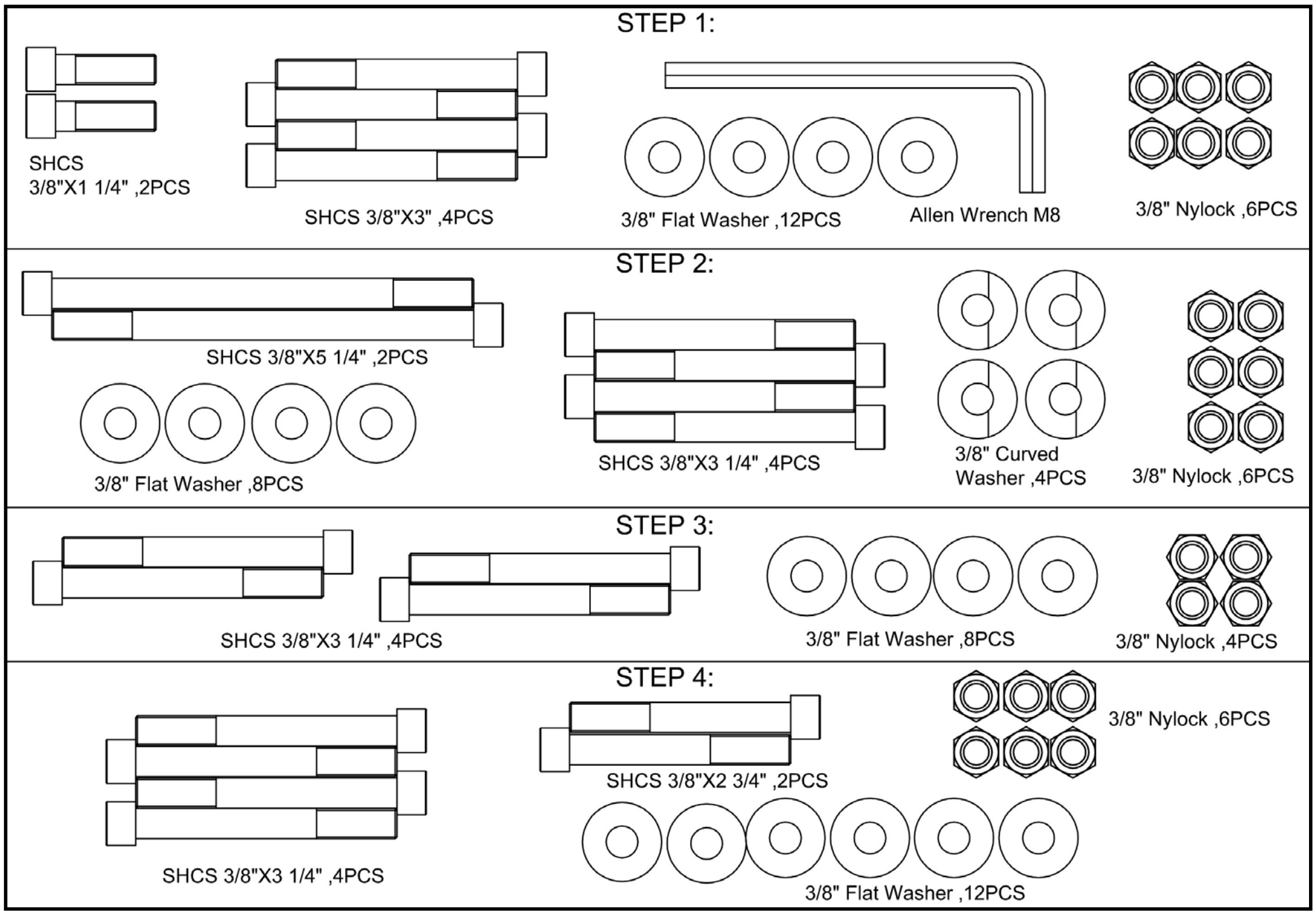

Hardware Blister Pack

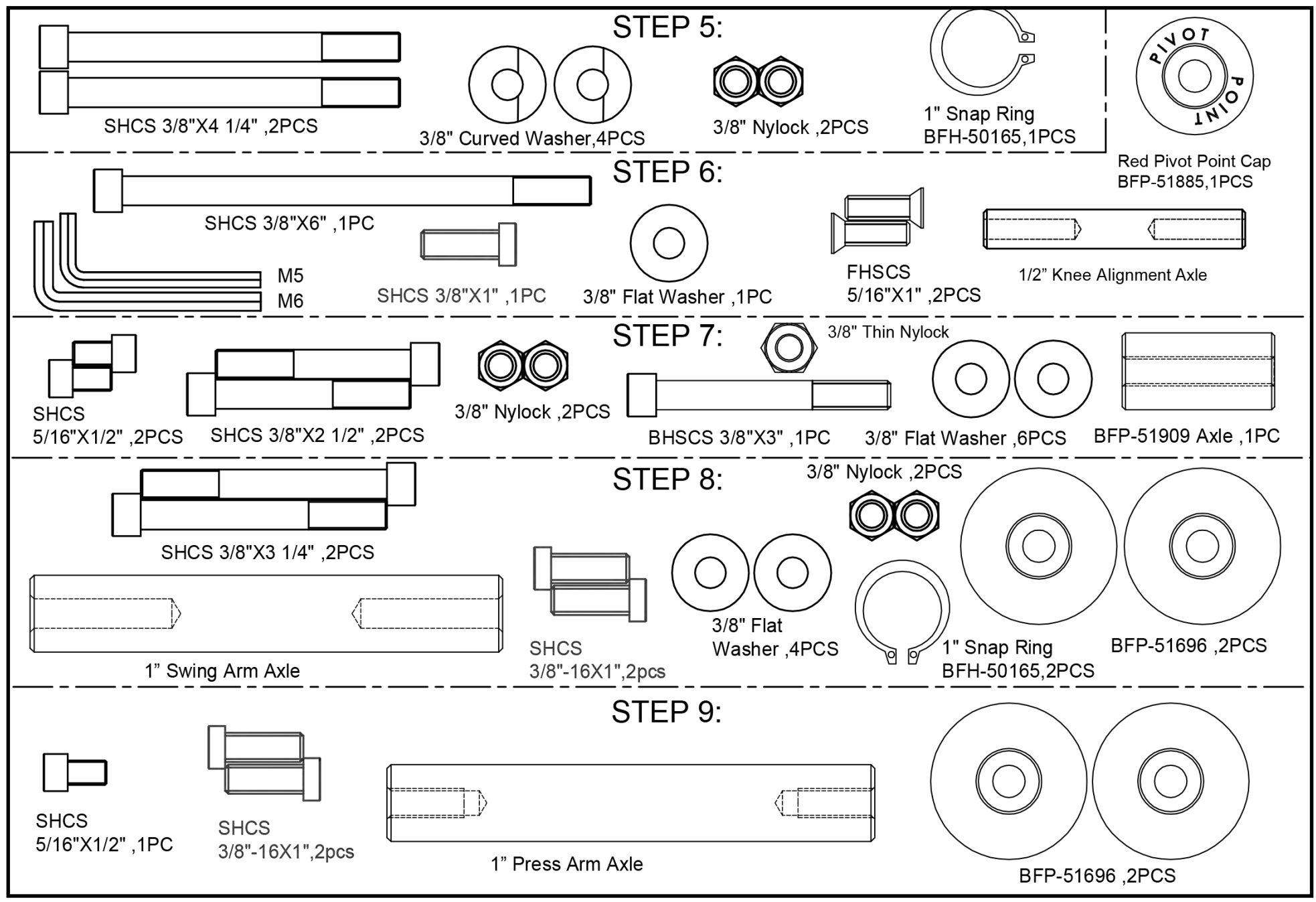

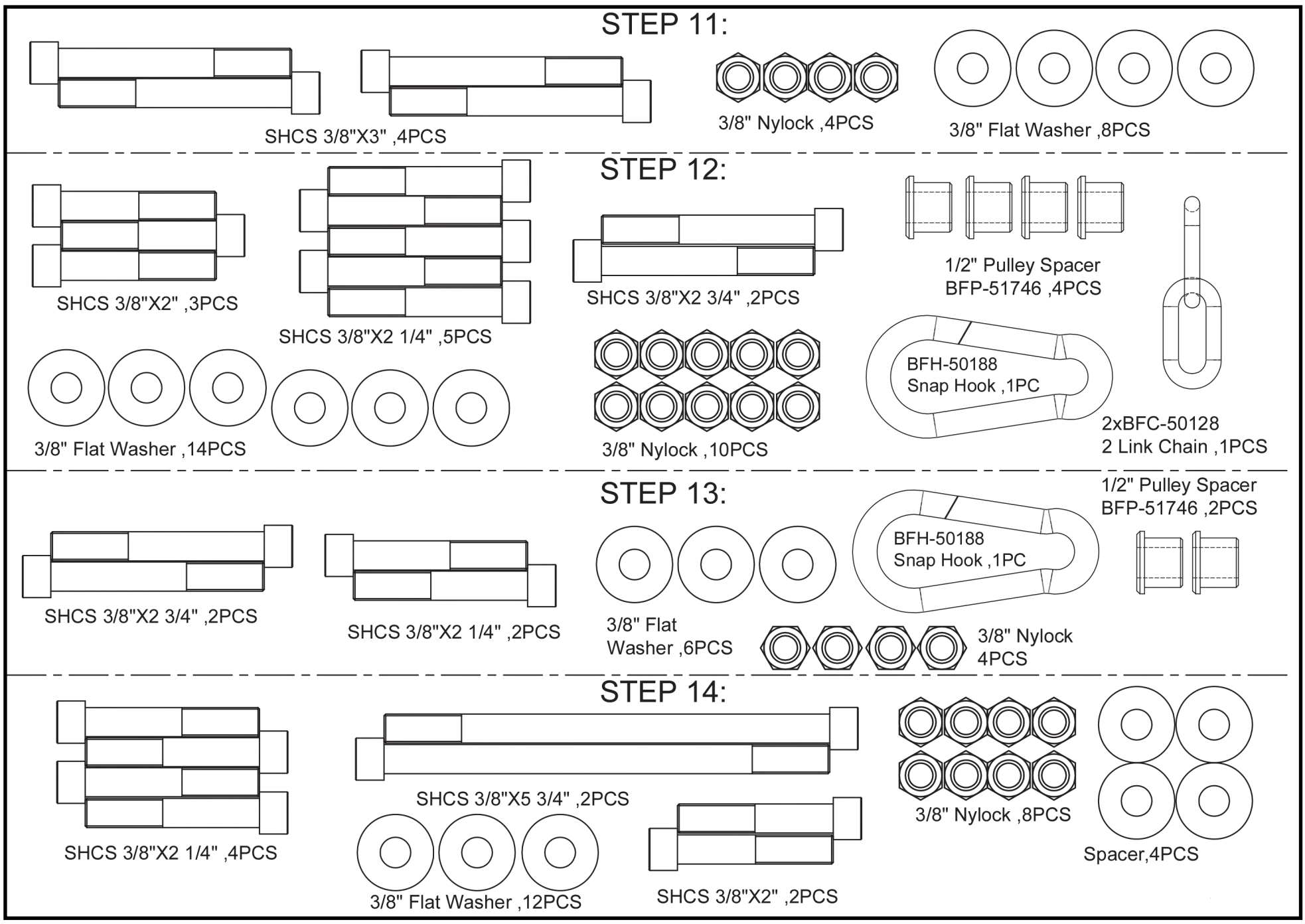

Hardware Blister Pack

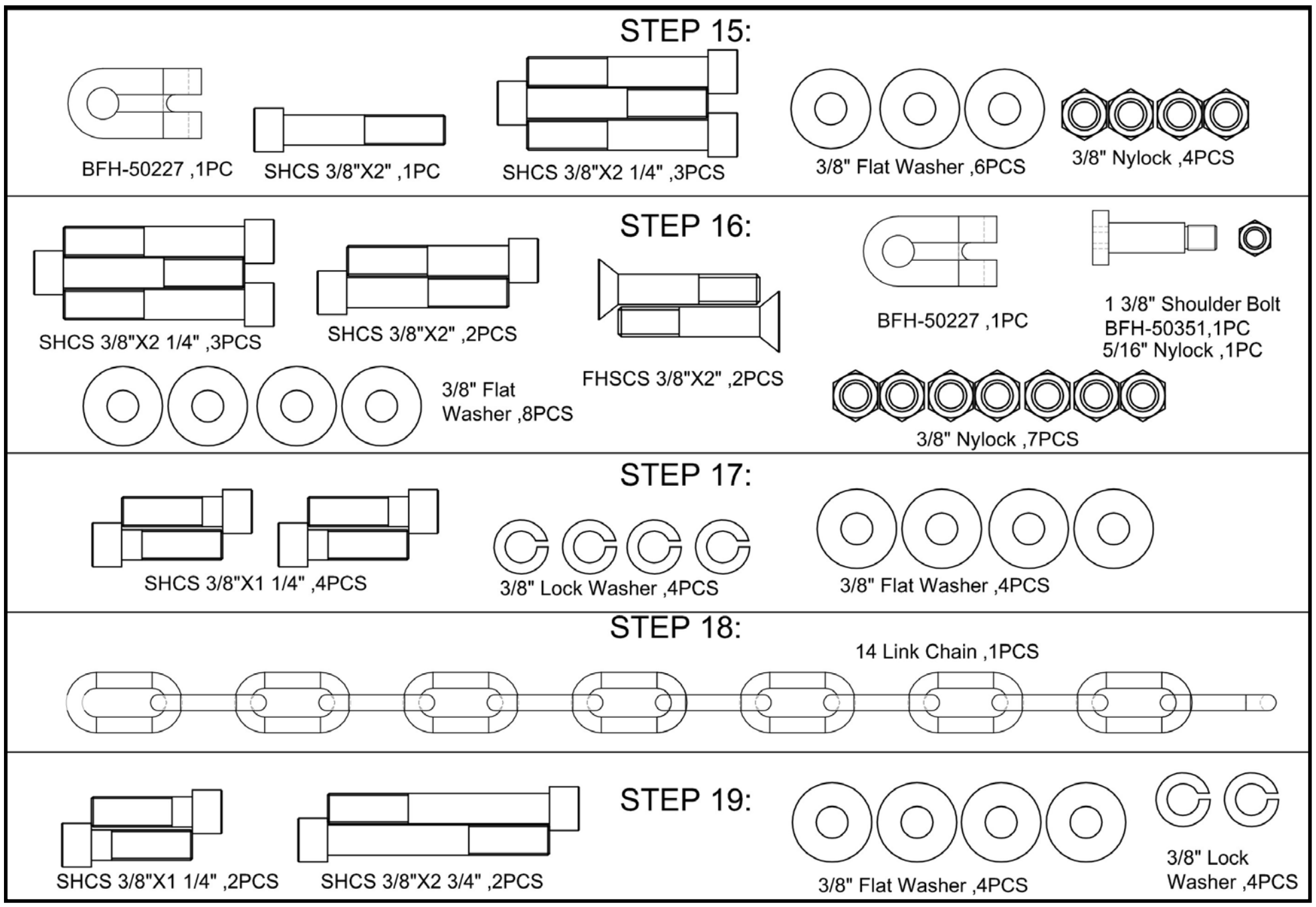

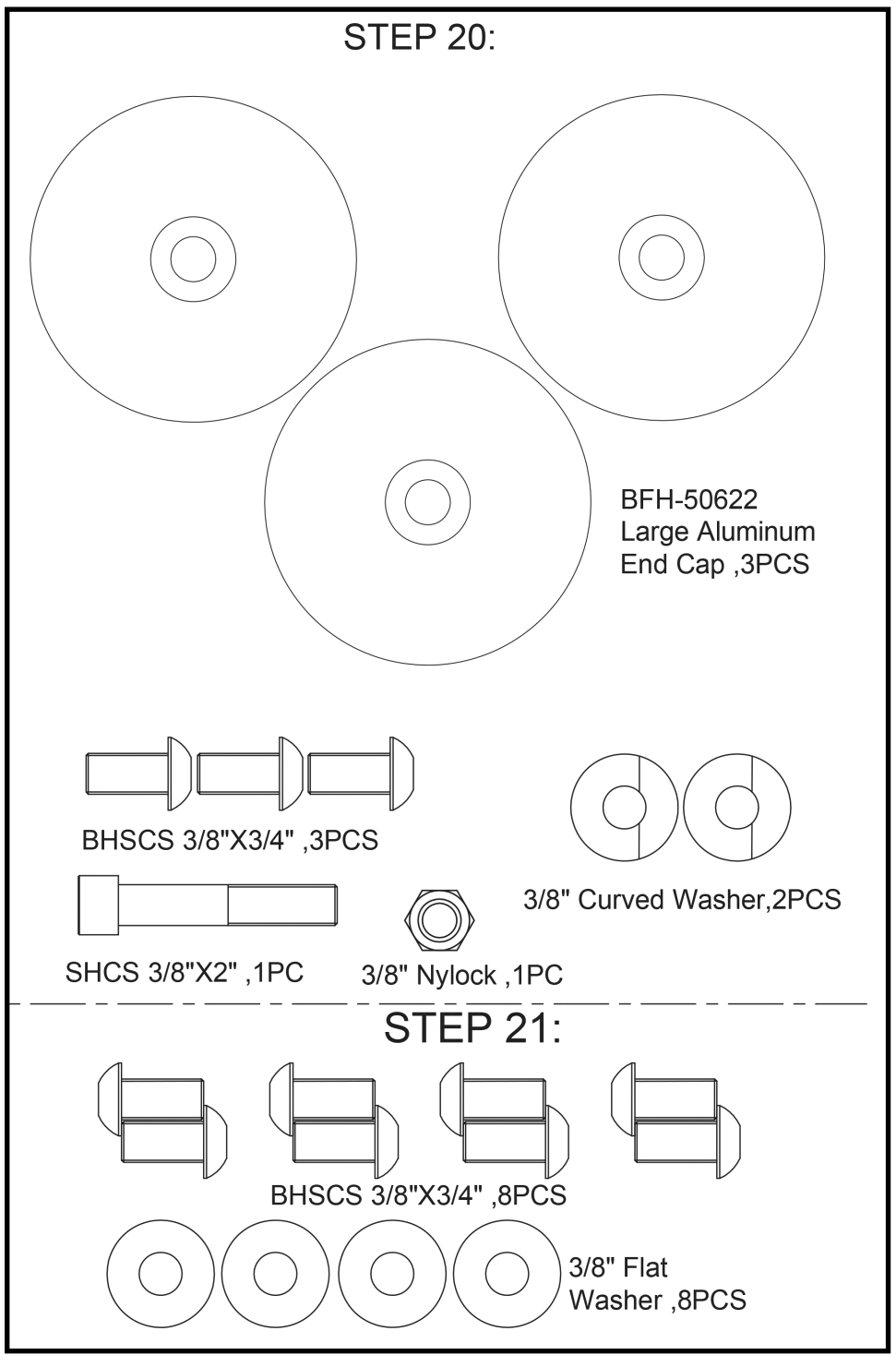

Omega 2 Leg Press Hardware Blister Pack

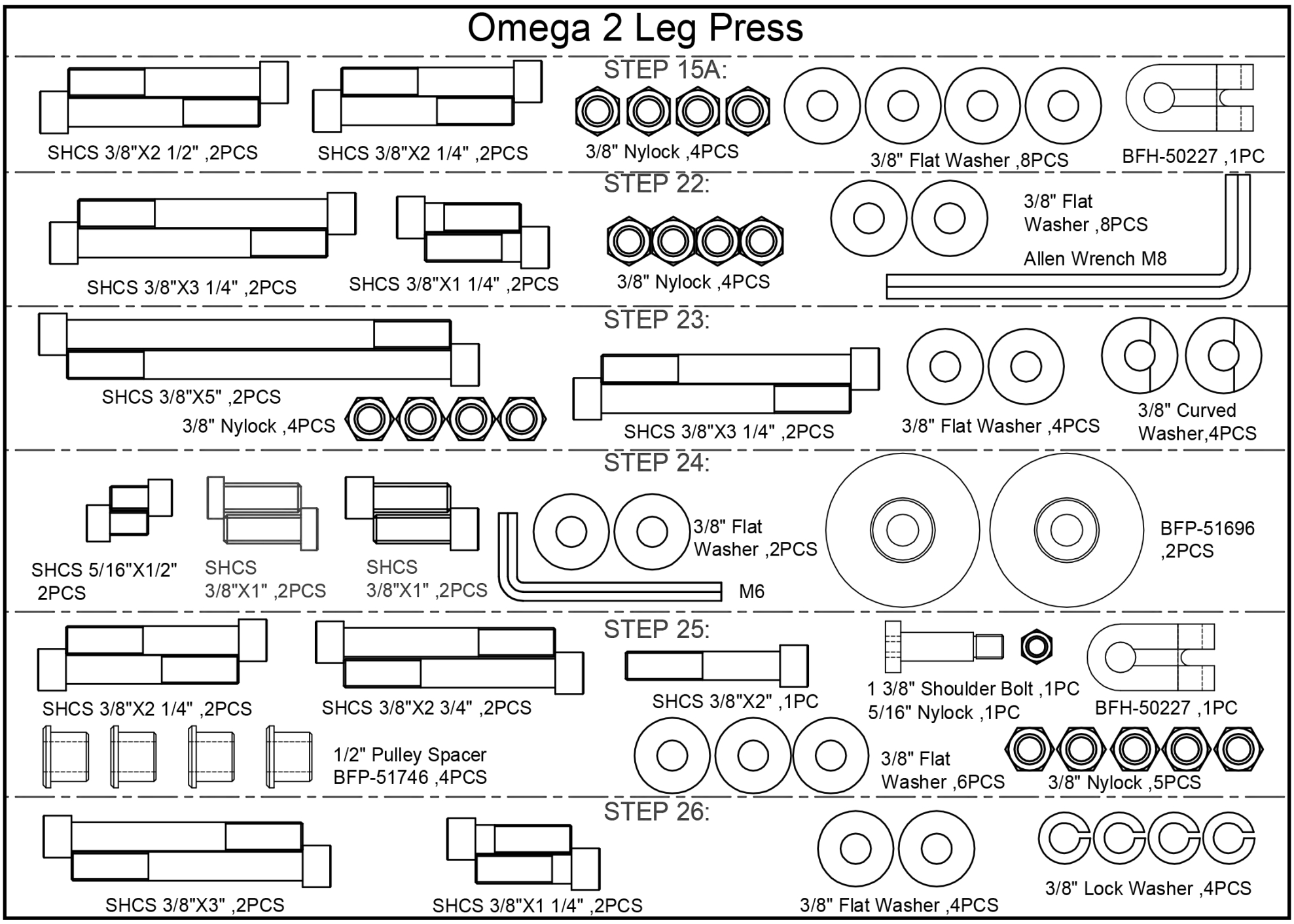

Step 1:

Note: Please Position Hardware in the same direction as shown in the figure. This will make future steps easier to assemble

All Flat Washers and Nylocks are 3/8" unless otherwise noted. Anywhere a washer is against the round side of a tube there is to be a ***3/8" CURVED WASHER*** instead of a ***3/8" FLAT WASHER.***

DO NOT TIGHTEN BOLTS UNTIL STEP 4

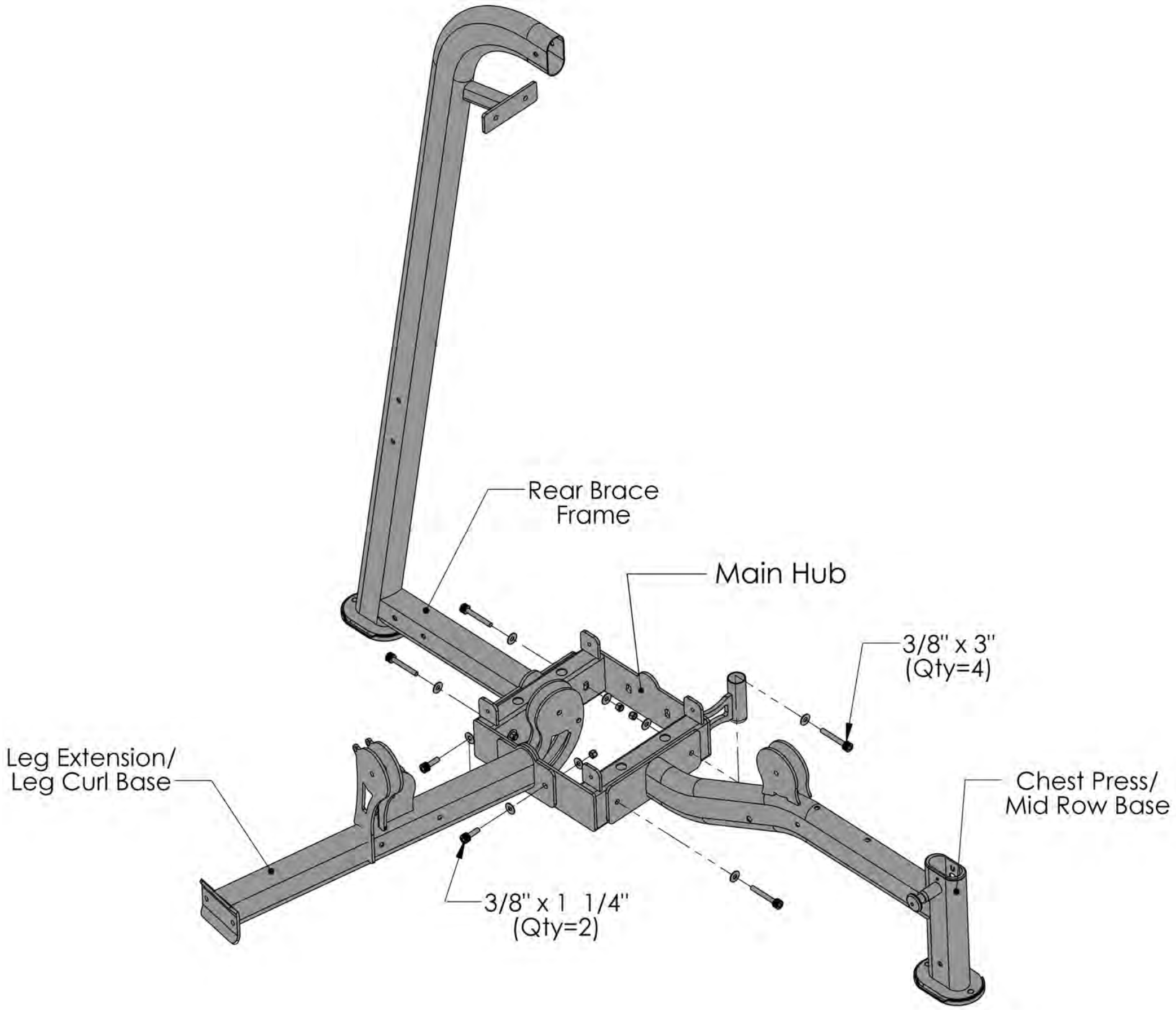

Part #	Description	Qty
BFP-10968	Main Hub	1
BFP-10984	Leg Extension/Leg Curl Base	1
BFP-10971	Rear Brace Frame	1
BFP-10969	Chest Press/Mid Row Base	1
BFP-51653	SHCS 3/8" x 1 1/4"	2
BFP-51747	SHCS 3/8" x 3"	4
BFH-50146	3/8" Flat Washer	12
BFH-50157	3/8" Nylock	6

Step 2:

Skip This Step if Leg Press Was Purchased. Do Not Tighten Bolts Until Step 4

Anti-Deflection Plate with Leg Ext./Leg Curl Pulley Holder

3/8" x 3 1/4" (Qty=2)

Anti-Deflection Plate

Top Frame

3/8" x 3 1/4" (Qty=2)

Chest Press/ Mid Row Upright Frame

3/8" x 5 1/4" (Qty=2)

3/8" Curved Washer (Qty=4)

Curved Anti-Deflection Plate

All Flat Washers and Nylocks are 3/8" unless otherwise noted. Anywhere a washer is against the round side of a tube there is to be a ***3/8" CURVED WASHER*** instead of a ***3/8" FLAT WASHER.***

Part #	Description	Qty
BFP-10975	Chest Press/Mid Row Upright Frame	1
BFP-10974	Top Frame	1
BFP-51768	Curved Anti-Deflection Plate	1
BFP-52213	Anti-Deflection Plate	1
BFP-10973	Anti-Deflection Plate with Leg Ext./Leg Curl Pulley Holder	1
BFP-51748	SHCS 3/8" x 3 1/4"	4
BFP-51756	SHCS 3/8" x 5 1/4"	2
BFH-50204	3/8" Curved Washer	4
BFH-50146	3/8" Flat Washer	8
BFH-50157	3/8" Nylock	6

Step 2A: ⚠ Follow This Step If Leg Press Was Purchased. Do Not Tighten Bolts Until Step 4

Anti-Deflection Plate with Leg Ext./Leg Curl Pulley Holder

3/8" x 3 1/4" (Qty=2)

Anti-Deflection Plate with Leg Press Pulley Holder

Top Frame

⚠ **Please install the <u>Anti-Deflection Plate with Leg Press Pulley Holder</u> (BFP-10973) instead of just Anti-Deflection Plate (BFP-51223) if Leg Press was purchased.**

3/8" x 3 1/4" (Qty=2)

Chest Press/ Mid Row Upright Frame

3/8" x 5 1/4" (Qty=2)

3/8" Curved Washer (Qty=4)

Curved Anti-Deflection Plate

All Flat Washers and Nylocks are 3/8" unless otherwise noted. Anywhere a washer is against the round side of a tube there is to be a ***3/8" CURVED WASHER*** instead of a ***3/8" FLAT WASHER.***

Part #	Description	Qty
BFP-10975	Chest Press/Mid Row Upright Frame	1
BFP-10974	Top Frame	1
BFP-51768	Curved Anti-Deflection Plate	1
BFP-10972	Anti-Deflection Plate with Leg Press Pulley Holder	1
BFP-10973	Anti-Deflection Plate with Leg Ext./Leg Curl Pulley Holder	1
BFP-51748	SHCS 3/8" x 3 1/4"	4
BFP-51756	SHCS 3/8" x 5 1/4"	2
BFH-50204	3/8" Curved Washer	4
BFH-50146	3/8" Flat Washer	8
BFH-50157	3/8" Nylock	6

Step 3:

Do not install the *Rear Bottom Brace (Left)* if Optional Leg Press was not purchased and use SHCS 3/8" x 3" Bolts instead of SHCS 3/8" x 3 1/4".

Do Not Tighten Bolts Until Step 4

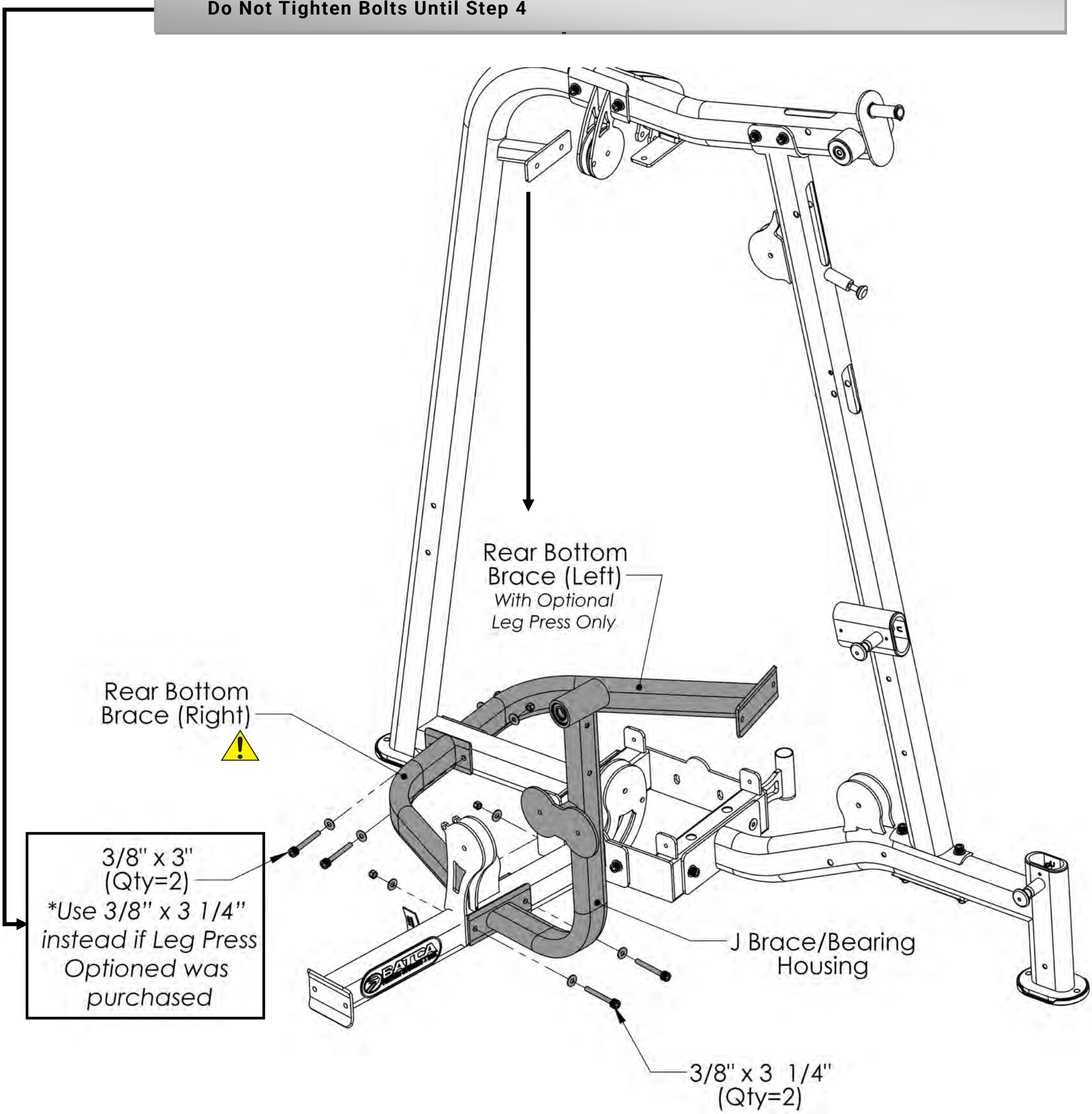

All Flat Washers and Nylocks are 3/8" unless otherwise noted.

Part #	Description	Qty
BFP-10990	Rear Bottom Brace (Right)	1
BFP-10992	Rear Bottom Brace (Left) Optional*	1
BFP-11016	J Brace/Bearing Housing	1
BFP-51748	SHCS 3/8" x 3 1/4"*	4
BFH-50146	3/8" Flat Washer	8
BFH-50157	3/8" Nylock	4

Step 4:

Make Sure All Bolts Are Tightened before moving on. And it is important that the MAIN HUB is sitting flat on the floor BEFORE and AFTER all bolts are tightened.

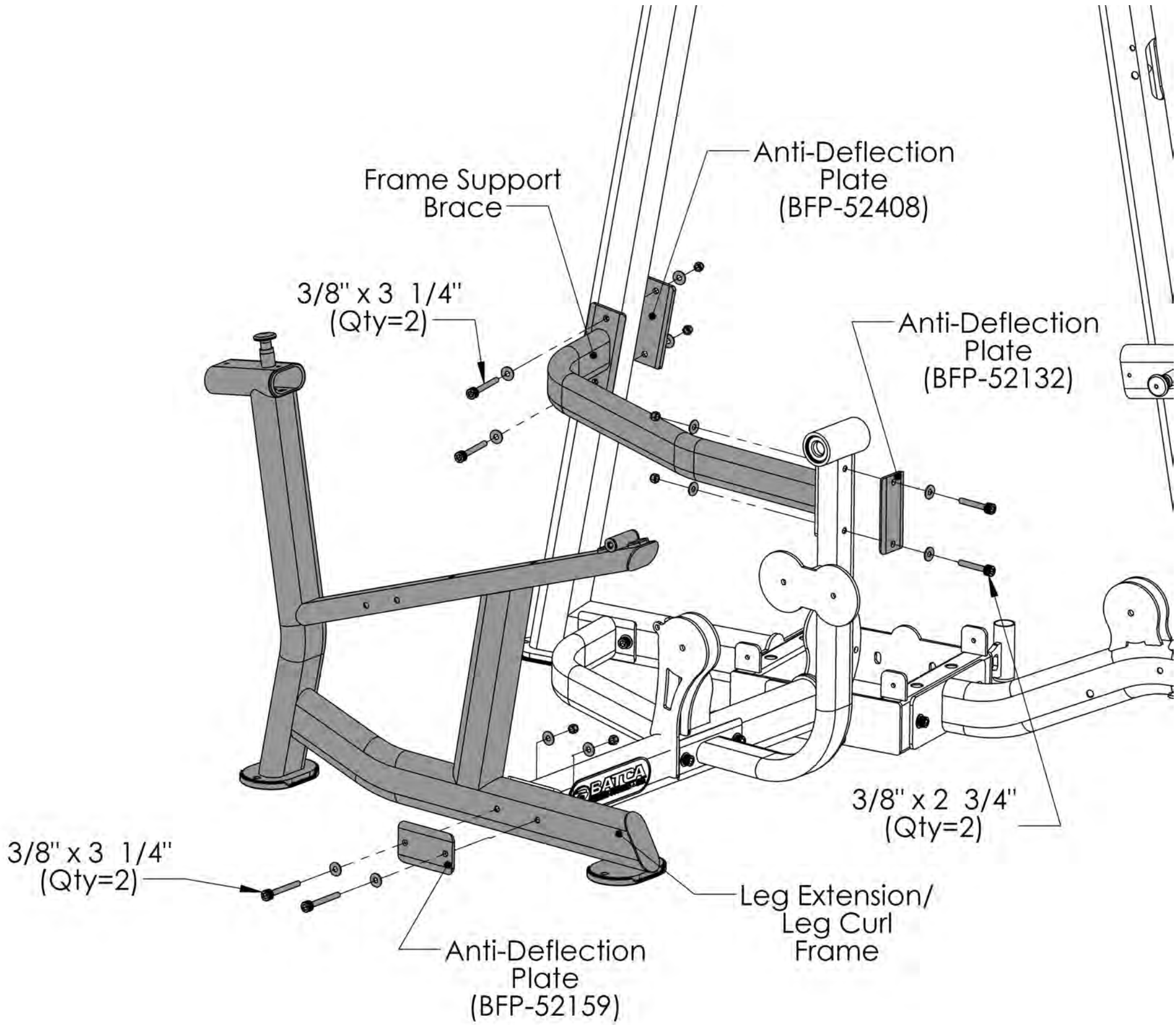

All Flat Washers and Nylocks are 3/8” unless otherwise noted.

Part #	Description	Qty
BFM-11310	Leg Extension/Leg Curl Frame	1
BFP-11027	Frame Support Brace	1
BFP-52132	Anti-Deflection Plate	1
BFP-52159	Anti-Defelection Plate	1
BFP-52408	Anti-Deflection Plate	1
BFP-51750	SHCS 3/8” x 2 3/4”	2
BFP-51748	SHCS 3/8” x 3 1/4”	4
BFH-50146	3/8” Flat Washer	12
BFH-50157	3/8” Nylock	6

Step 5: ⚠ Make Sure All Bolts Are Tightened Before Moving On

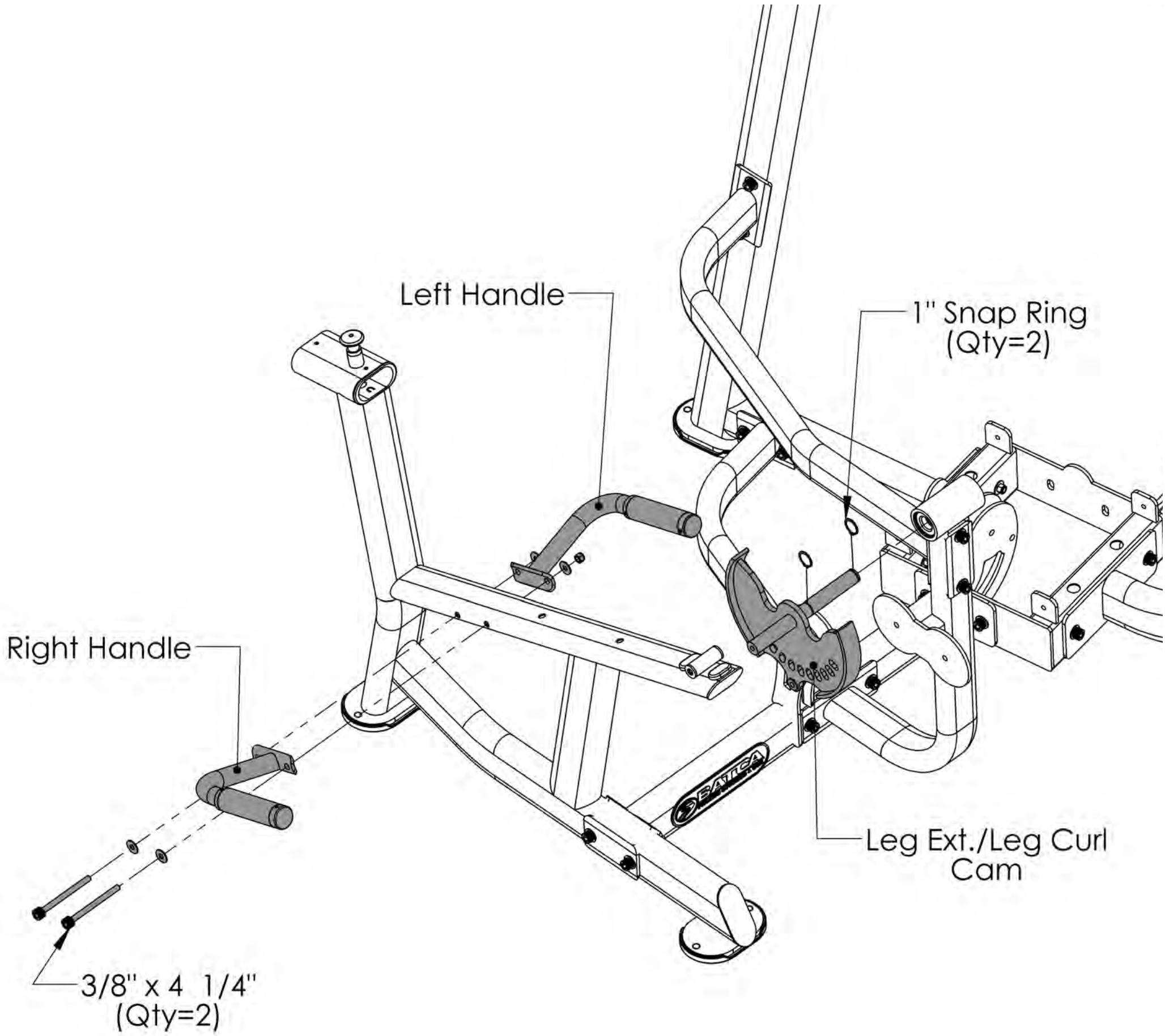

All Flat Washers and Nylocks are 3/8” unless otherwise noted. Anywhere a washer is against the round side of a tube there is to be a ***3/8” CURVED WASHER*** instead of a ***3/8” FLAT WASHER.***

Part #	Description	Qty
BFP-10873	Left Handle	1
BFP-10872	Right Handle	1
BFP-10867	Leg Ext./Leg Curl Cam	1
BFH-50165	1” Snap Ring	2
BFP-51799	SHCS 3/8” x 4 1/4”	2
BFH-50204	3/8” Curved Washer	4
BFH-50146	3/8” Nylock	2

Step 6: ⚠ Make Sure All Bolts Are Tightened Before Moving On

3/8" x 6"

6" Counter Weight

Knee Alignment Roller

FHSCS 5/16" x 1" (Qty=2)

Axle

Leg Ext./Leg Curl Arm

Red Pivot Point Cap

SHCS 3/8" x 1" Low Profile

All Flat Washers and Nylocks are 3/8" unless otherwise noted. Anywhere a washer is against the round side of a tube there is to be a ***3/8" CURVED WASHER*** instead of a ***3/8" FLAT WASHER.***

Part #	Description	Qty
BFM-11272	Leg Ext./Leg Curl Arm	1
BFP-52364	6" Counter Weight	1
BFM-11268	Knee Alignment Roller	1
BFM-53188	1/2" Knee Alignment Axle	1
BFP-51885	Red Pivot Point Cap	1
BFH-50245	FHSCS 5/16" x 1"	2
BFH-50665	SHCS 3/8" x 1" - Low Profile	1
BFP-52364	SHCS 3/8" x 6"	1
BFH-50146	3/8" Flat Washer	1

Step 7: ⚠ Make Sure All Bolts Are Tightened Before Moving On

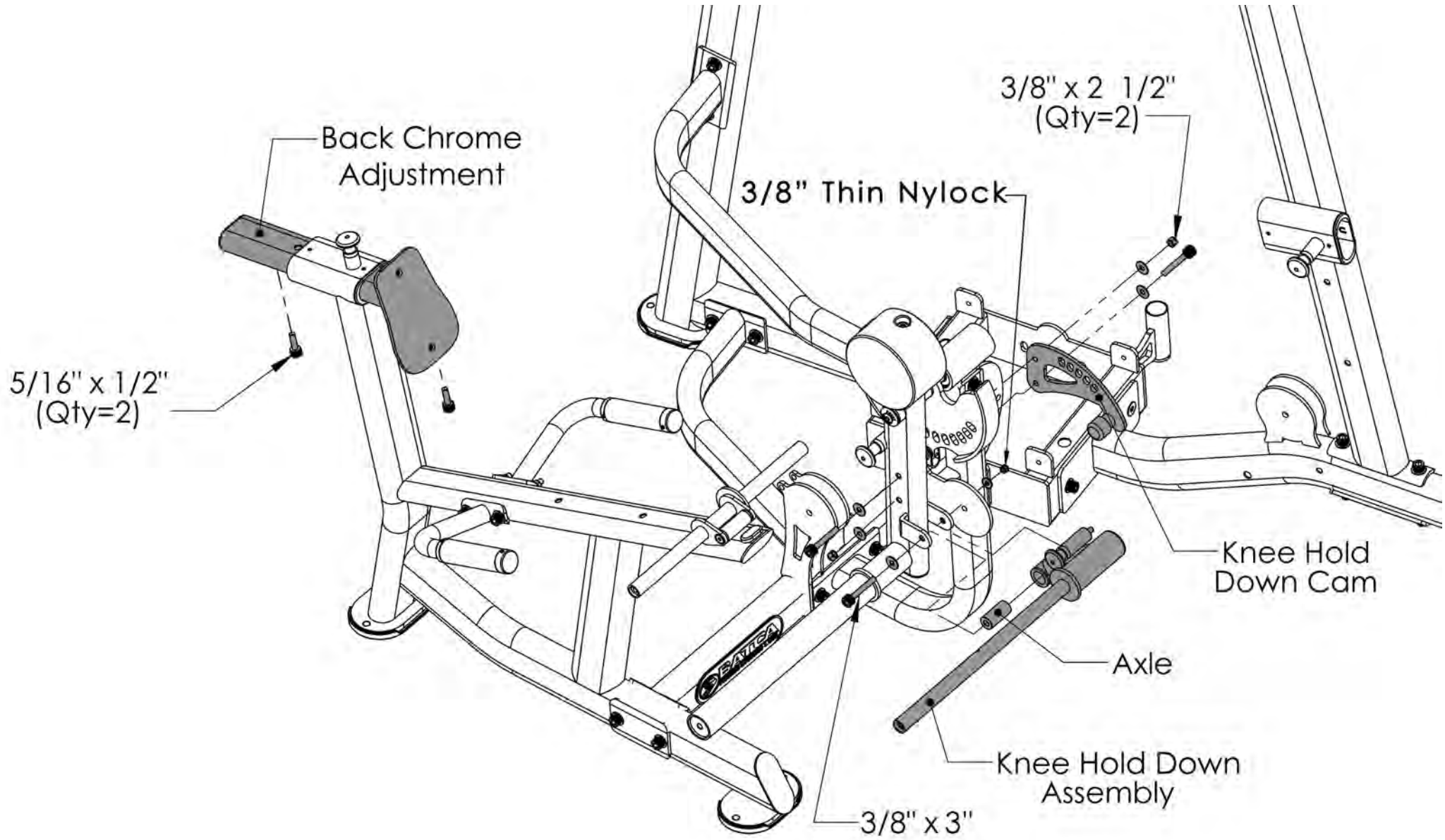

Part #	Description	Qty
BFM-11271	Knee Hold Down Assembly	1
BFP-52201	Knee Hold Down Cam	1
BFP-51909	Axle	1
BFP-10948	Back Chrome Adjustment	1
BFP-52372	SHCS 5/16” x 1/2”	2
BFP-51747	SHCS 3/8” x 3”	1
BFP-52382	SHCS 3/8” x 2 1/2”	2
BFH-50146	3/8” Flat Washer	6
BFH-50157	3/8” Nylock	2
BFH-50247	3/8” Thin Nylock	1

All Flat Washers and Nylocks are 3/8” unless otherwise noted. Anywhere a washer is against the round side of a tube there is to be a ***3/8” CURVED WASHER*** instead of a ***3/8” FLAT WASHER.***

Step 8:

Make Sure All Bolts Are Tightened Before Moving On

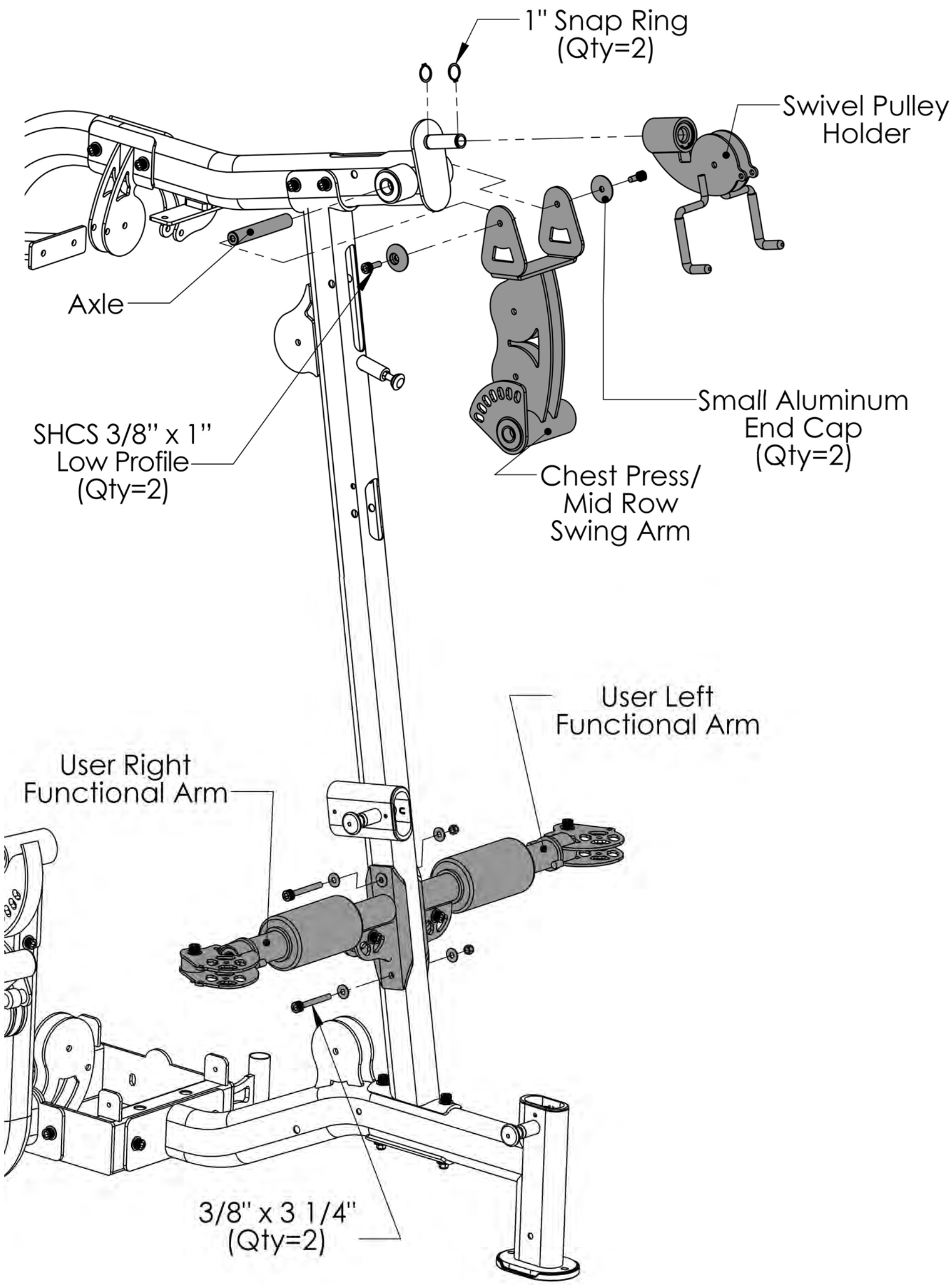

Part #	Description	Qty
BFP-10978	Chest Press/Mid Row Swing Arm	1
BFP-11025	User Right Functional Arm	1
BFP-11026	User Left Functional Arm	1
BFP-11017	Swivel Pulley Holder	1
BFP-51776	1” Swing Arm Axle	1
BFP-51696	Small Aluminum End Cap	2
BFH-50165	1” Snap Ring	2
BFH-50665	SHCS 3/8” x 1” - Low Profile	2
BFP-51748	SHCS 3/8” x 3 1/4” ”	2
BFH-50146	3/8” Flat Washer	4
BFH-50157	3/8” Nylock	2

All Flat Washers and Nylocks are 3/8” unless otherwise noted. Anywhere a washer is against the round side of a tube there is to be a ***3/8” CURVED WASHER*** instead of a ***3/8” FLAT WASHER.***

Step 9: ⚠ Make Sure All Bolts Are Tightened Before Moving On

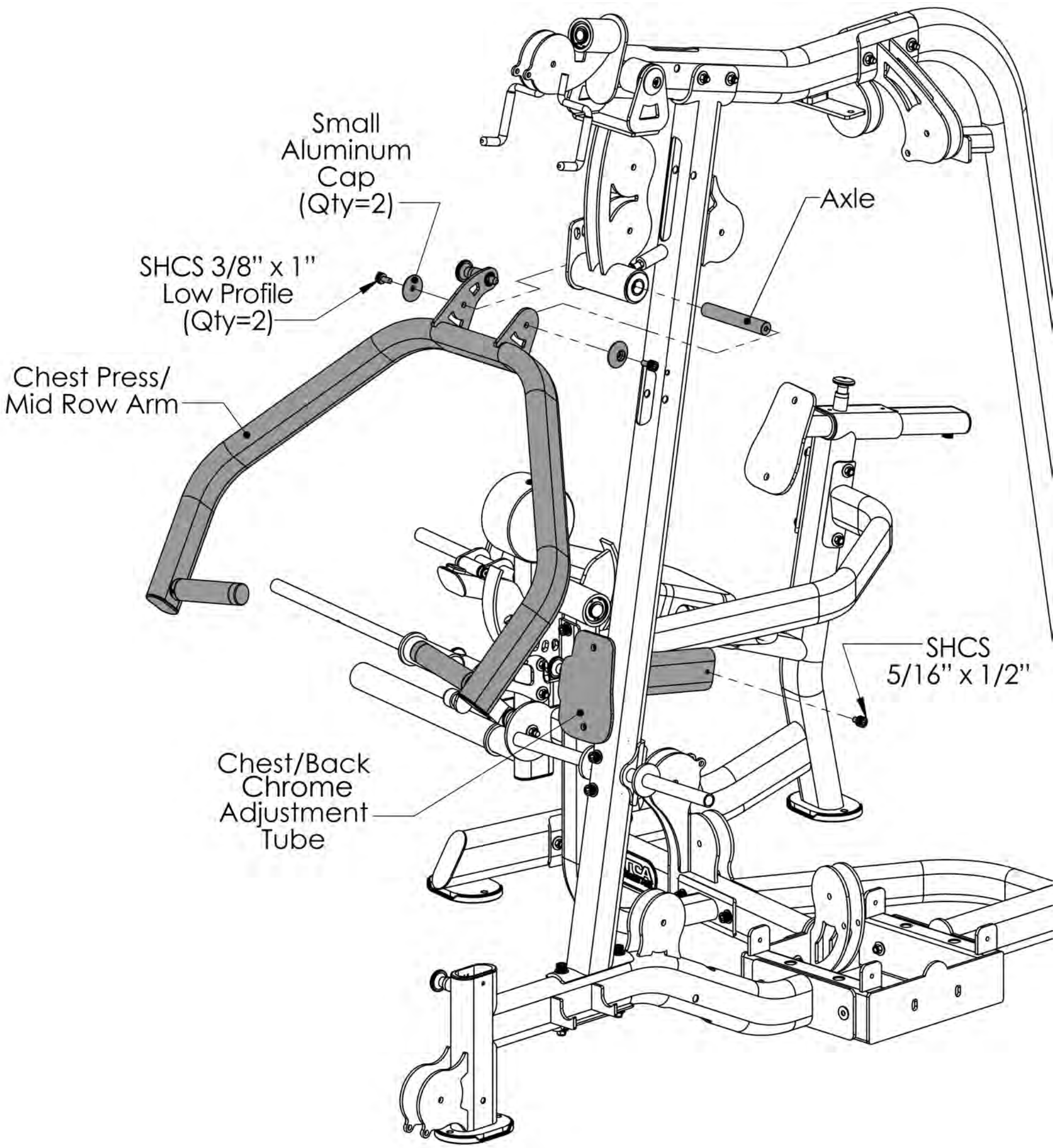

Part #	Description	Qty
BFP-10979	Chest Press/Mid Row Arm	1
BFP-10980	Chest/Back Chrome Adjustment	1
BFP-52370	1" Press Arm Axle	1
BFP-51696	Small Aluminum End Cap	2
BFP-52372	SHCS 5/16" x 1/2"	1
BFH-50665	SHCS 3/8" x 1" - Low Profile	2

All Flat Washers and Nylocks are 3/8" unless otherwise noted. Anywhere a washer is against the round side of a tube there is to be a ***3/8" CURVED WASHER*** instead of a ***3/8" FLAT WASHER.***

Step 10:

Make Sure All Bolts Are Tightened Before Moving On

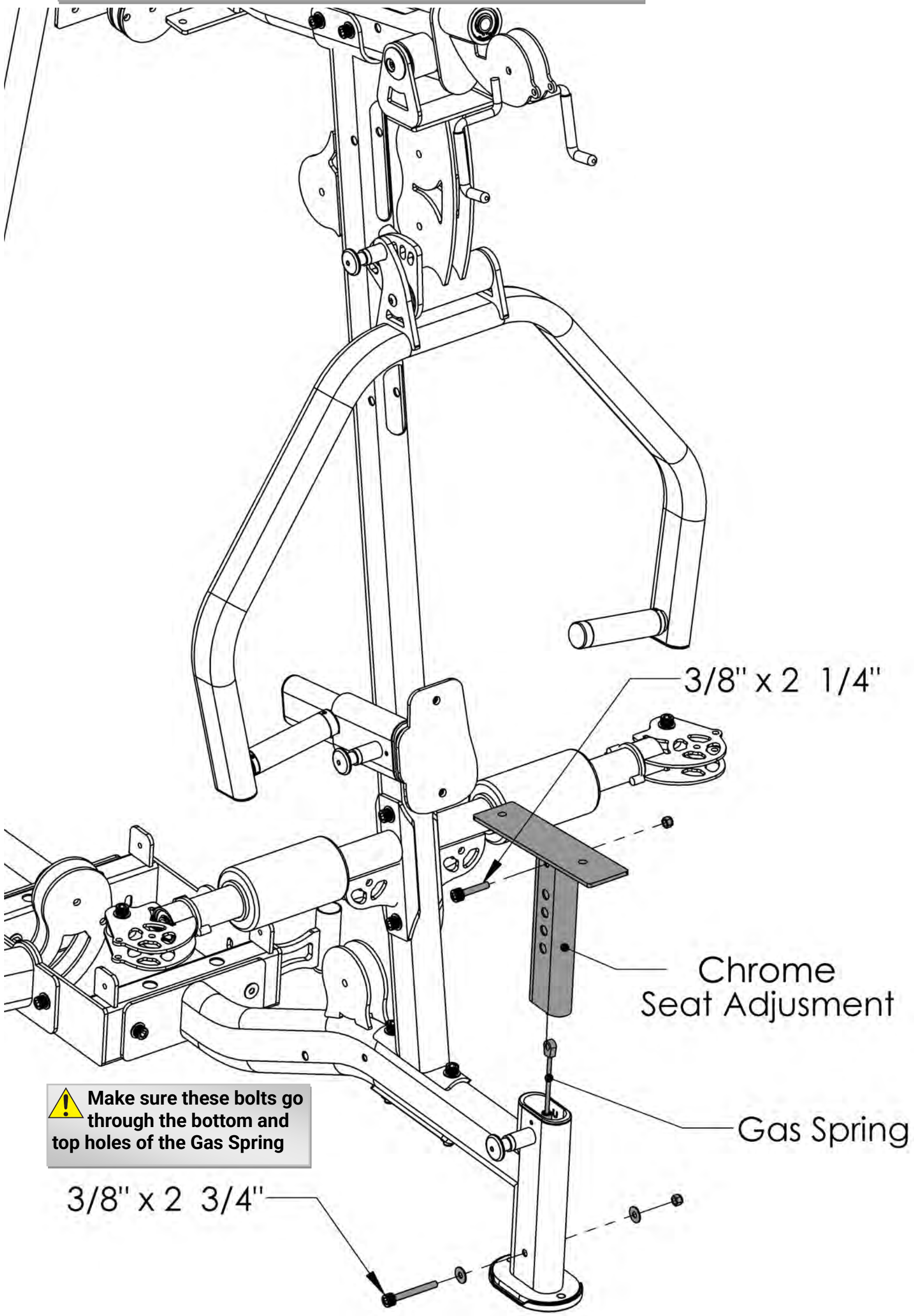

Make sure these bolts go through the bottom and top holes of the Gas Spring

All Flat Washers and Nylocks are 3/8” unless otherwise noted. Anywhere a washer is against the round side of a tube there is to be a ***3/8” CURVED WASHER*** instead of a ***3/8” FLAT WASHER.***

Part #	Description	Qty
BFP-11013	Chrome Seat Adjustment	1
BFH-50210	Gas Spring	1
BFP-51752	SHCS 3/8” x 2 1/4”	1
BFP-51750	SHCS 3/8” x 2 3/4”	1
BFH-50146	3/8” Flat Washer	2
BFH-50157	3/8” Nylock	2

Step 11: ⚠ Make Sure All Bolts Are Tightened Before Moving On

3/8" x 3" (Qty=4)

Front Guide Rod/ Pulley Holder

Guide Rod Sleeve (Qty=2)

Rear Guide Rod Double Pulley Holder

Long Guide Rods (Qty=2)

Rear Guide Rod/Double Pulley Holder

Short Guide Rods (Qty=2)

Weight Stack Pull Pin

Top Weight Plate (Qty=2)

Weight Stack Plate (Qty=38)

Weight Stack Pull Pin

Rubber Donut (Qty=4)

⚠ Make sure the screw in the Guide Rod Sleeves is facing towards the back of the weight stack and the sleeve is pushed up against the rubber grommet of the Guide Rod Holder Once it is in place tighten the screw to keep it in place.

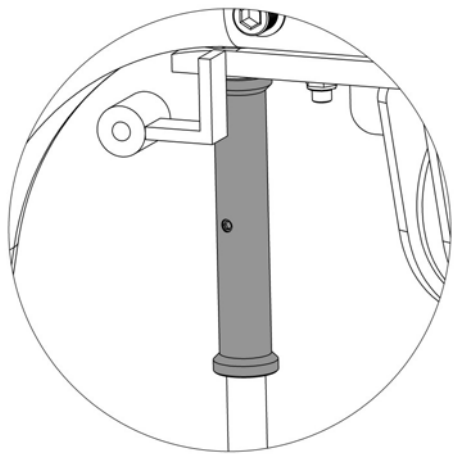

All Flat Washers and Nylocks are 3/8” unless otherwise noted.

Part #	Description	Qty
BFP-10976	Front Guide Rod/Pulley Holder	1
BFP-10977	Rear Guide Rod/Double Pulley Holder	1
BFP-52227	Long Guide Rod	2
BFP-52226	Short Guide Rod	2
BFM-10299	Top Weight Plate	2
BFM-50256	Weight Stack Plate	38
BFP-52143	Rubber Donut	4
BFP-52383	Guide Rod Sleeve	2
BFM-53079	Weight Stack Pull Pin	2
BFP-51747	SHCS 3/8” x 3”	4
BFH-50146	3/8” Flat Washer	8
BFH-50157	3/8” Nylock	4

Step 12: ⚠ Make Sure All Bolts Are Tightened Before Moving On

⚠ **Every place that a pulley is inside a tube there must be a pulley spacer in use instead of a flat washer.**

1 3/8" Shoulder Bolt
3/8" x 2 1/4"
5/16" Nylock
3/8" x 2"
3/8" x 2 3/4" (Qty=2) With 1/2" Pulley Spacers (Qty=4)
2 Link Chain
Snap Hook
3/8" x 2 1/4"
4 1/2" Pulley (Qty=9)
Double Pulley Plate (Qty=2)
CAB-14018
1/2" Jam Nut

Start Cable Routing here.

You must take the Stop Ball and the strap end off of the cable in order to route it.

Note: The threaded bolt on the end of the cable **must be threaded at least 1/2"** the Free Floater and Top Weight Plate. The bolt must also be secured with a 1/2" Jam Nut to ensure a safe and proper connection.

CAB-14018

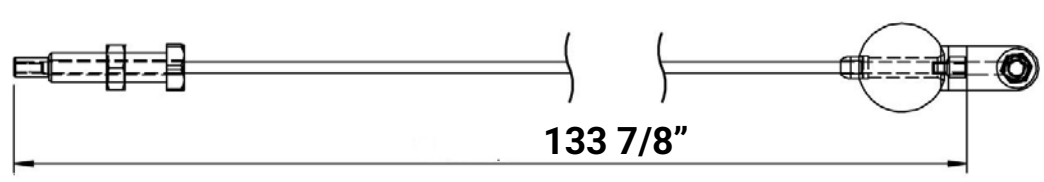

All Flat Washers and Nylocks are 3/8" unless otherwise noted. .

Part #	Description	Qty
CAB-14018	Weight Stack to Swivel Pulley	1
BFP-52165	Double Pulley Plate	2
2xBFC-50128	2x 1" Link Chain	1
BFH-50188	Snap Hook	1
BFH-50174	4 1/2" Pulley	9
BFP51746-	1/2" Pulley Spacers	4
BFH-50351	1 3/8" Shoulder Bolt	1
BFP-51759	SHCS 3/8" x 2"	3
BFP-51752	SHCS 3/8" x 2 1/4"	5
BFP-51750	SHCS 3/8" x 2 3/4"	2
BFH-50267	5/16" Nylock	1
BFH-50146	3/8" Flat Washer	14
BFH-50157	3/8" Nylock	10

Step 13: ⚠ Make Sure All Bolts Are Tightened Before Moving On

⚠ **Start Cable Routing here**

5/16" Nylock

Free Floater With Lockout

4 1/2" Pulley (Qty=2)

1 3/8" Shoulder Bolt

5/16" Nylock

1/2" Pulley Spacer (Qty=2)

Snap Hook/5 Link Chain

3 1/2" Pulley

3/8" x 2 3/4" (Qty=2)

1 3/8" Shoulder Bolt

3/8" x 2 1/4"

CAB-14015

3/8" x 2 1/4"

After Installing CAB-14015 Attach 5 Link Chain to the Snap Hook

CAB-14015

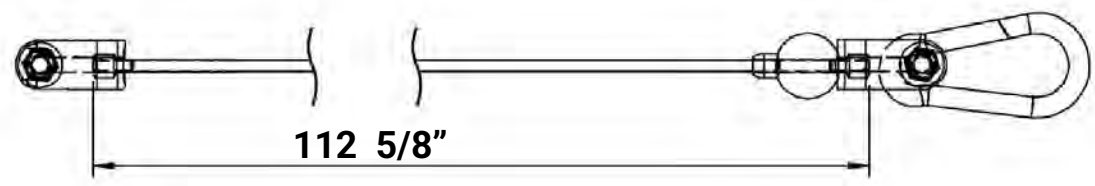

All Flat Washers and Nylocks are 3/8" unless otherwise noted.

Part #	Description	Qty
CAB-14015	Free Floater to Mid Pulley	1
BFH-50188	Snap Hook	1
5xBFC-50128	5x 1" Link Chain	1
BFP-51746	1/2" Pulley Spacer	2
BFH-50173	3 1/2" Pulley	1
BFH-50174	4 1/2" Pulley	2
BFP-11037	Free Floater with Lockout	1
BFH-50351	1 3/8" Shoulder Bolt	2
BFP-51752	SHCS 3/8" x 2 1/4"	2
BFP-51750	SHCS 3/8" x 2 3/4"	2
BFH-50267	5/16" Nylock	2
BFH-50146	3/8" Flat Washer	6
BFH-50157	3/8" Nylock	4

Step 14: ⚠ Make Sure All Bolts Are Tightened Before Moving On

Start Cable Routing here.

You must take the Stop Ball and the strap end off of one end of the cable in order to route it.

3/8" x 2 1/4" (Qty=4)

3/8" x 5 3/4" (Qty=2)

4 1/2" Pulley (Qty=4)

3/8" x 2" (Qty=2)

3 1/2" Pulley (Qty=2)

CAB-14014

3 1/2" Pulley (Qty=2)

Spacer (Qty=4)

4 1/2" Pulley Cover (Qty=4)

- **Position** the cable guard tab on the Pulley Cover so that the tab prevents the cable from coming out of it's track on the 4 1/2" Pulley. An example of this positioning can be seen in the figure to the right. The cable guard tab should be positioned so that it is in the middle of the cable wrap on the 4 1/2" Pulley, between points "A" and "B". This will allow better protection and prevent the cable from rubbing the cable guard tab.

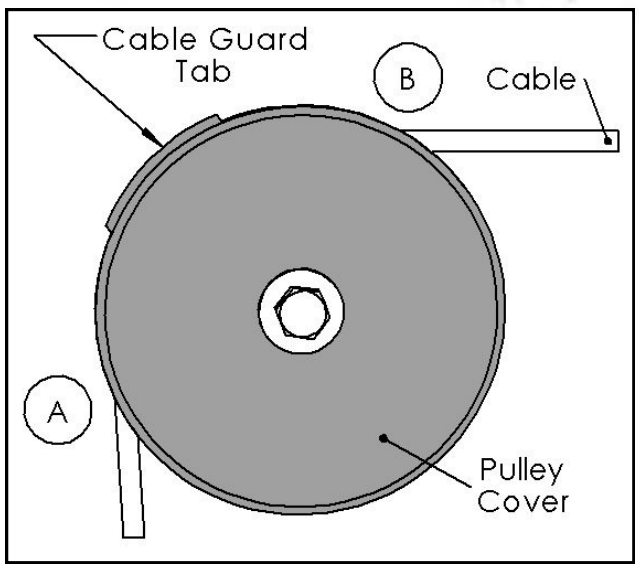

CAB-14014

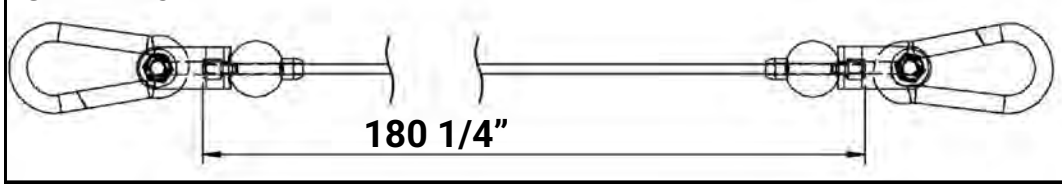

All Flat Washers and Nylocks are 3/8" unless otherwise noted.

Part #	Description	Qty
CAB-14014	Funtional Arm to Functional Arm	1
BFM-50345	4 1/2" Pulley Cover	4
BFP-52412	Spacer	4
BFH-50173	3 1/2" Pulley	4
BFH-50174	4 1/2" Pulley	4
BFP-51759	3/8" x 2"	2
BFP-51752	3/8" x 2 1/4"	4
BFH-52520	SCHS 3/8" x 5 3/4"	2
BFH-50146	3/8" Flat Washer	12
BFH-50157	3/8" Nylock	8

Step 15:

Skip This Step If The Leg Press Was Purchased. Make Sure All Bolts Are Tightened Before Moving On

3/8" x 2"

3/8" x 2 1/4" (Qty=3)

4 1/2" Pulley (Qty=3)

Free Floater With Stop

CAB-14013

Start Cable Routing here

1/2" Jam Nut

Note: The threaded bolt on the end of the cable **must be threaded at least 1/2"** the Free Floater and Top Weight Plate. The bolt must also be secured with a 1/2" Jam Nut to ensure a safe and proper connection.

CAB-14013

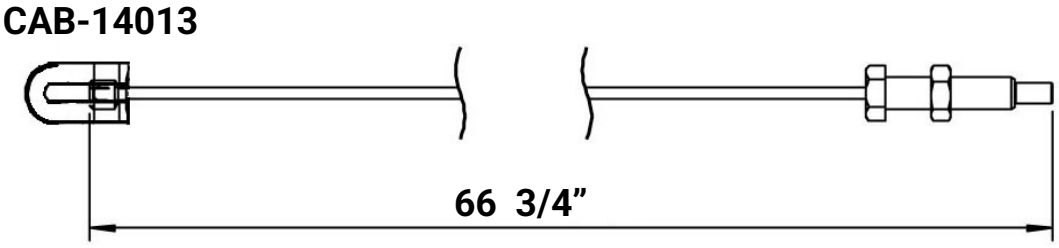

All Flat Washers and Nylocks are 3/8" unless otherwise noted.

Part #	Description	Qty
CAB-14013	Weight Stack to Lockout	1
BFP-11022	Free Floater With Stop	1
BFH-50174	4 1/2" Pulley	3
BFP-51759	SHCS 3/8" x 2"	1
BFP-51752	SHCS 3/8" x 2 1/4"	3
BFH-50146	3/8" Flat Washer	6
BFH-50157	3/8" Nylock	4

Step 15A: ⚠ Follow This Step If The Leg Press Was Purchased. Make Sure All Bolts Are Tightened Before Moving On

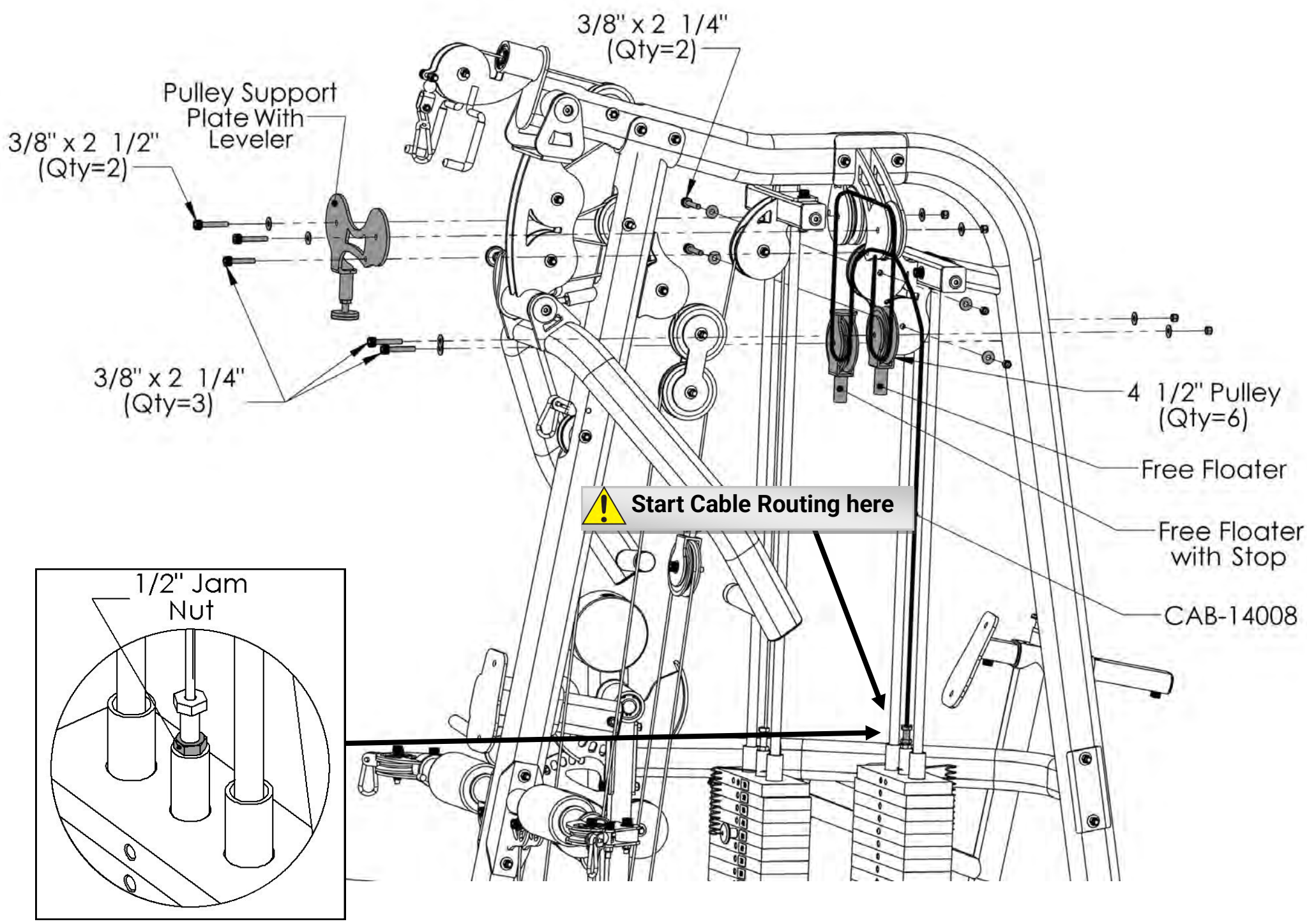

Note: The threaded bolt on the end of the cable **must be threaded at least 1/2"** the Free Floater and Top Weight Plate. The bolt must also be secured with a 1/2" Jam Nut to ensure a safe and proper connection.

CAB-14008

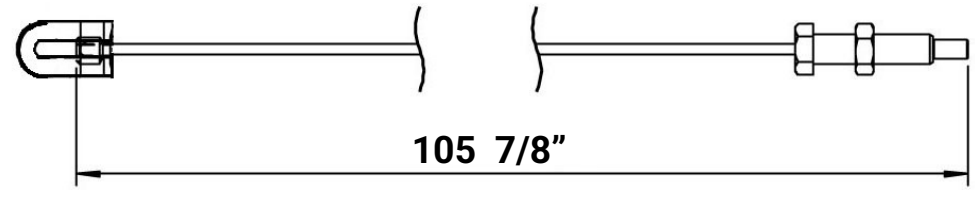

All Flat Washers and Nylocks are 3/8" unless otherwise noted. Anywhere a washer is against the round side of a tube there is to be a ***3/8" CURVED WASHER*** instead of a ***3/8" FLAT WASHER.***

Part #	Description	Qty
CAB-14008	Weight Stack to Leg Press Free Floater	1
BFP-10838	Free Floater	1
BFP-11022	Free Floater with Stop	1
BFP-11021	Pulley Support Plate with leveler	1
BFH-50174	4 1/2" Pulley	6
BFP-51752	SHCS 3/8" 2 1/4"	5
BFP-52382	SHCS 3/8" x 2 1/2"	2
BFH-50146	3/8" Flat Washer	12
BFH-50157	3/8" Nylock	7

Step 16: ⚠ Make Sure All Bolts Are Tightened Before Moving On

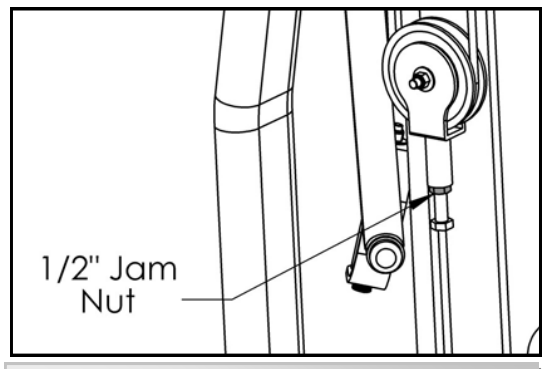

Note: The threaded bolt on the end of the cable **must be threaded at least 1/2"** the Free Floater and Top Weight Plate. The bolt must also be secured with a 1/2" Jam Nut to ensure a safe and proper connection.

⚠ **Start Cable Routing here**

Take Strap End off of cable for easy routing.

CAB-14012

5/16" Nylock

1 3/8" Shoulder Bolt

3/8" x 2"

Double Pulley Cover

FHSCS 3/8" x 2" (Qty=2)

4 1/2" Pulley (Qty=5)

3/8" x 2 1/4" (Qty=2)

3/8" x 2 1/4"

3/8" x 2"

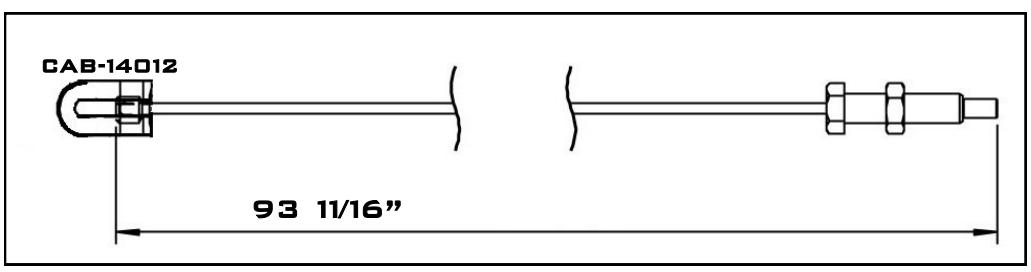

All Flat Washers and Nylocks are 3/8" unless otherwise noted.

Part #	Description	Qty
CAB-14012	Free Floater Leg Extension Cam	1
BFP-51883	Double Pulley Cover	1
BFH-50174	4 1/2" Pulley	5
BFH-50351	1 3/8" Shoulder Bolt	1
BFP-52377	FHSCS 3/8" x 2"	2
BFP-51759	SHCS 3/8" x 2"	2
BFP-51752	SHCS 3/8" x 2 1/4"	3
BFH-50267	5/16" Nylock	1
BFH-50146	3/8" Flat Washer	8
BFH-50157	3/8" Nylock	7

Step 17: ⚠ Make Sure All Bolts Are Tightened Before Moving On

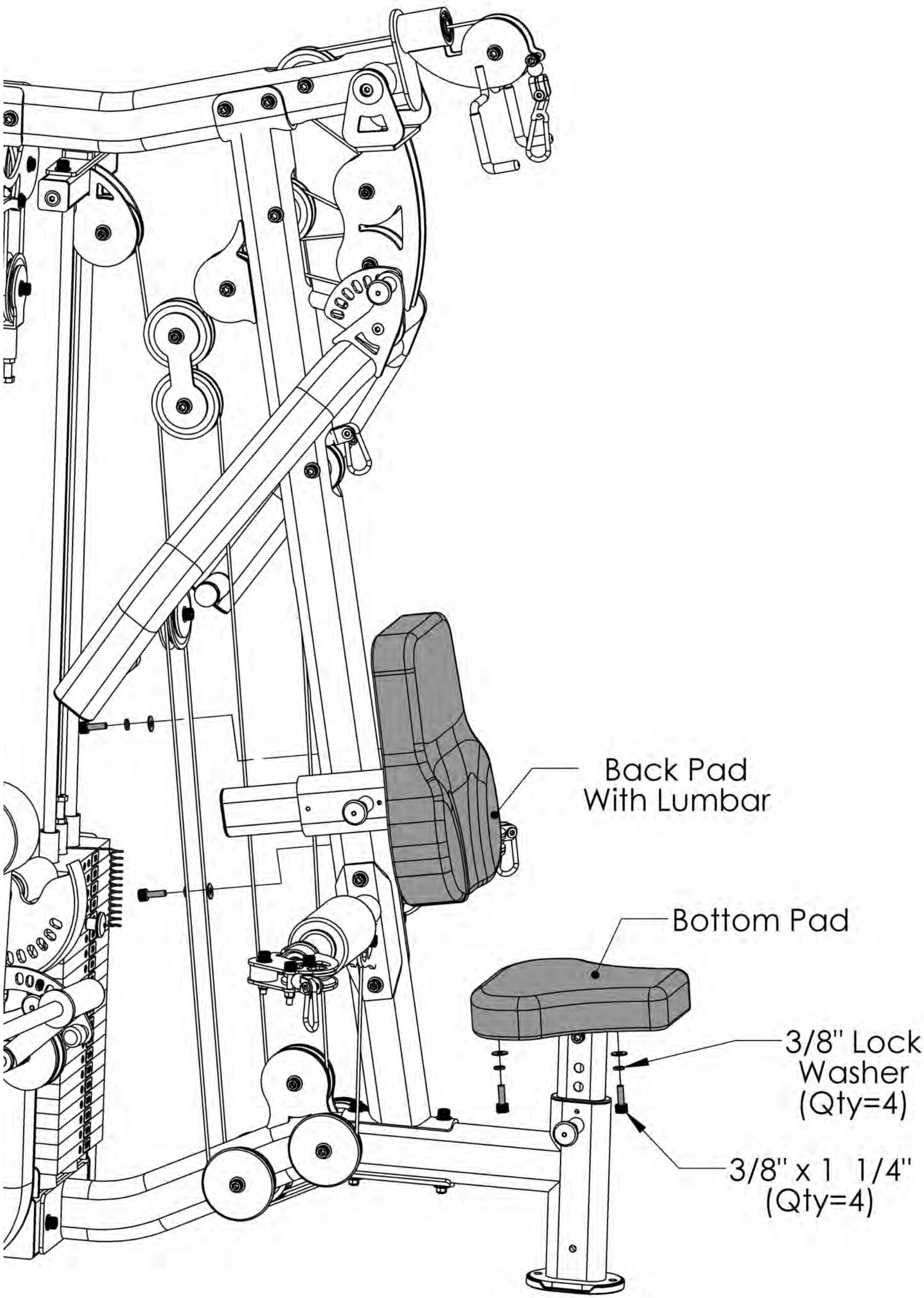

All Flat Washers and Nylocks are 3/8” unless otherwise noted.

Part #	Description	Qty
BFU-10189	Back Pad with Lumbar	1
BFU-10186	Bottom Pad	1
BFP-51653	SHCS 3/8” x 1 1/4”	4
BFH-50147	3/8” Lock Washer	4
BFH-50146	3/8” Flat Washer	4

Step 18: ⚠ Make Sure All Bolts Are Tightened Before Moving On

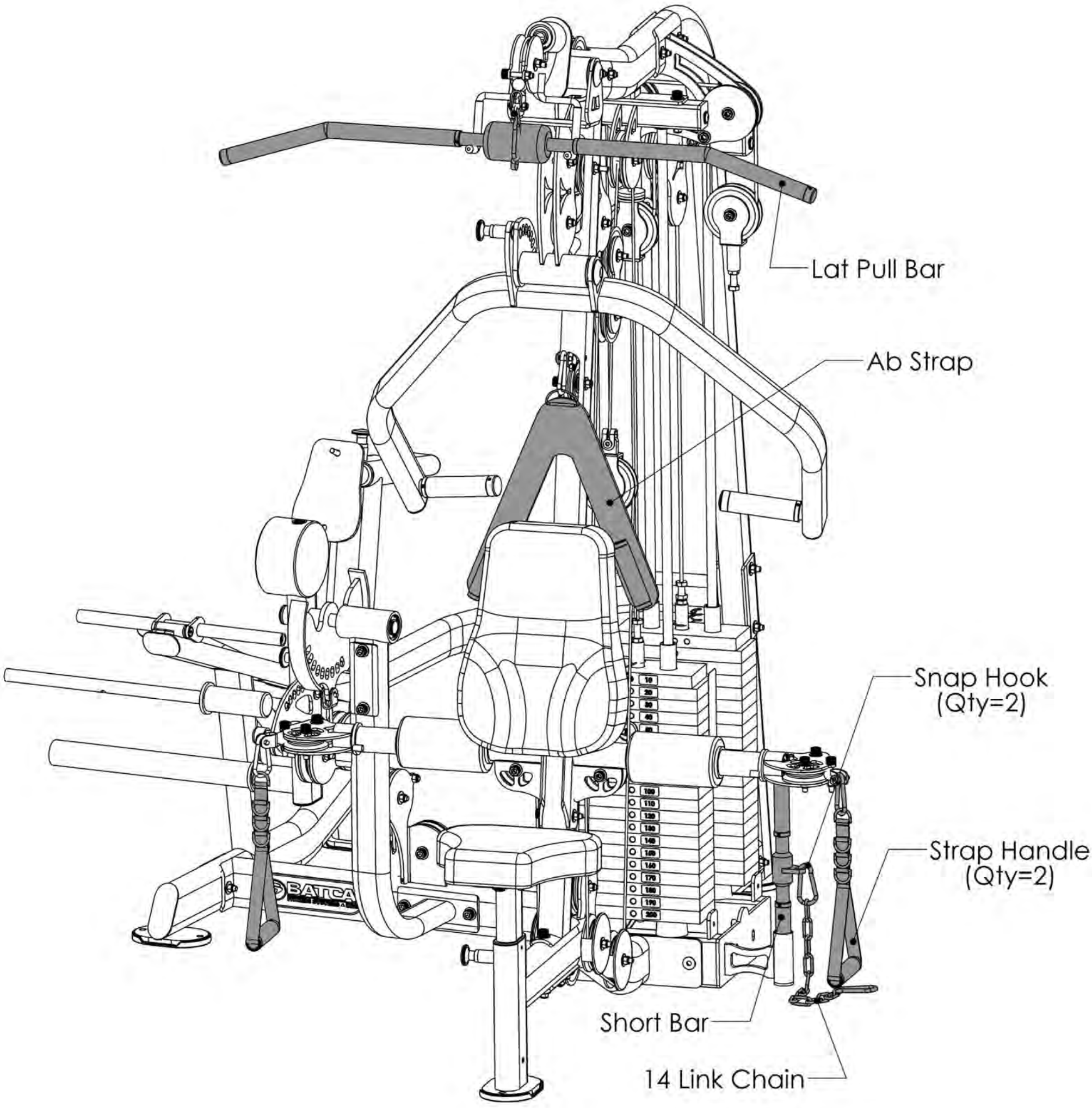

Part #	Description	Qty
BFC-10103	Strap Handle	2
BFC-50122	Ab Strap	1
BFC-50125	Lat Pull Bar	1
BFC-50126	Short Bar	1
16xBFC-50128	16 Link Chain	1
BFH-50188	Snap Hook	2

Step 19: ⚠ Make Sure All Bolts Are Tightened Before Moving On

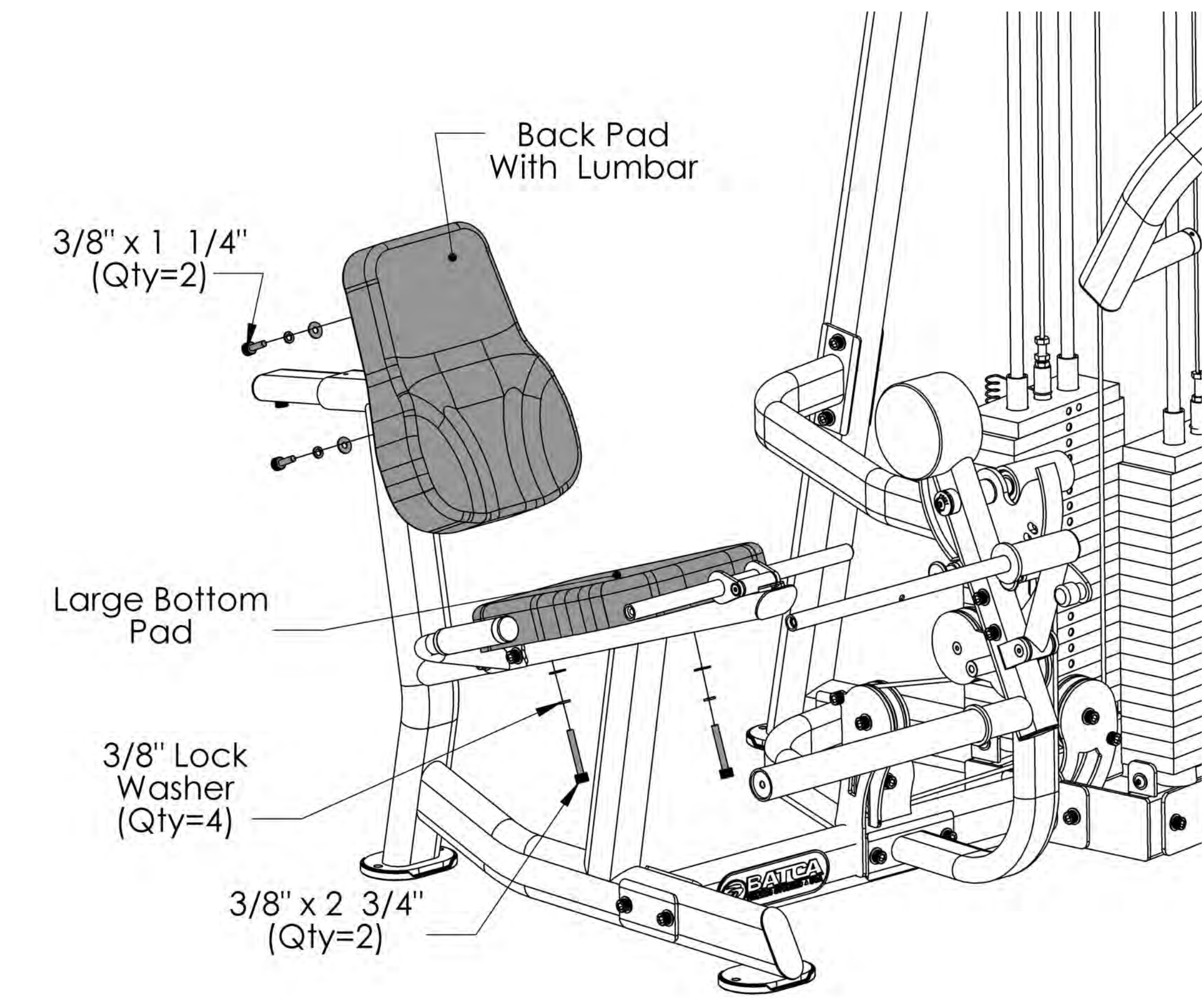

All Flat Washers and Nylocks are 3/8” unless otherwise noted.

Part #	Description	Qty
BFU-10189	Back Pad With Lumbar	1
BFU-10188	Large Bottom Pad	1
BFP-51653	SHCS 3/8” x 1 1/4”	2
BFP-51750	SHCS 3/8” x 2 3/4”	2
BFH-50147	3/8” Lock Washer	4
BFH-50146	3/8” Flat Washer	4

Step 20: ⚠ Make Sure All Bolts Are Tightened Before Moving On

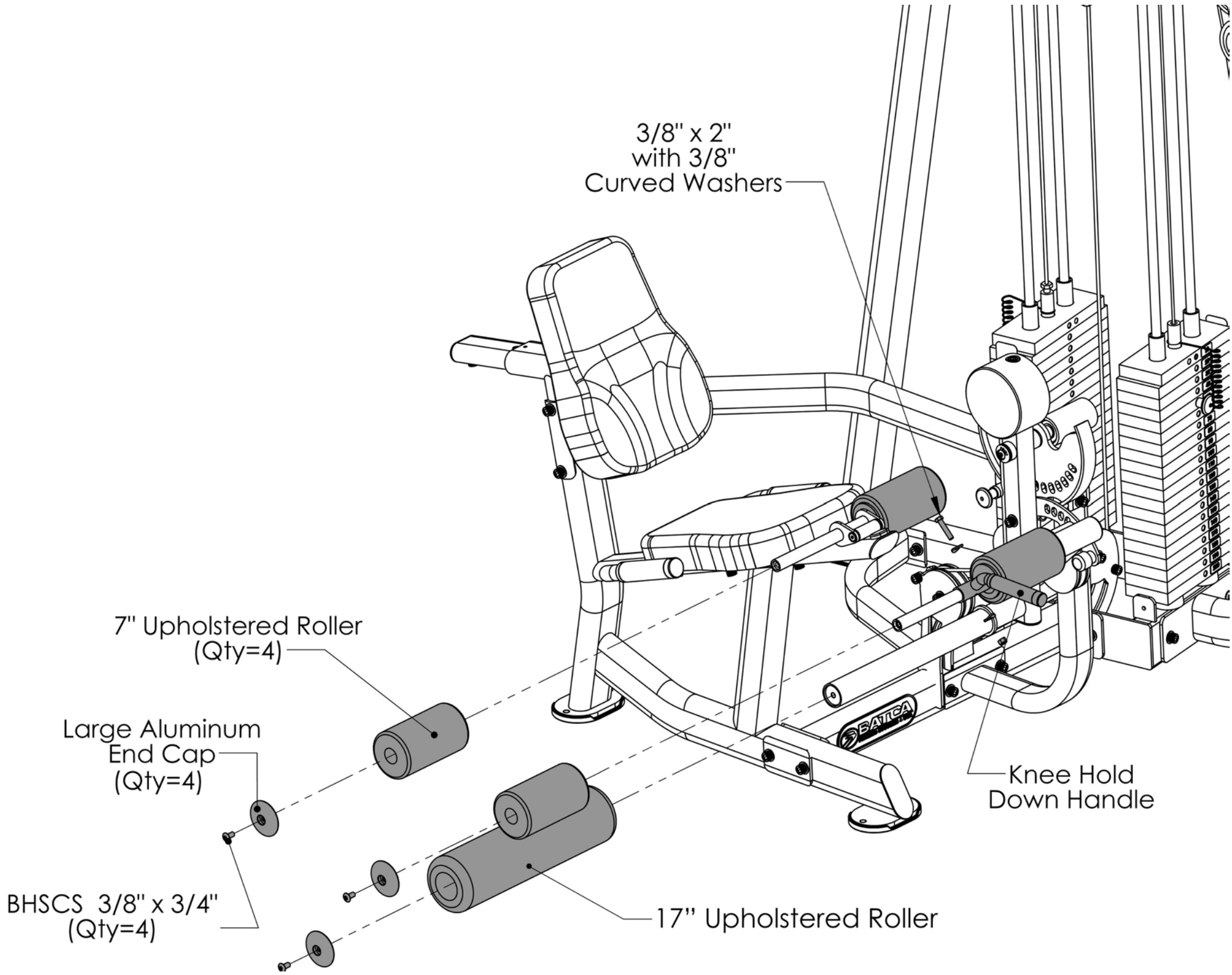

All Flat Washers and Nylocks are 3/8" unless otherwise noted.

Part #	Description	Qty
BFU-10201	7" Upholstered Roller	4
BFU-10202	17" Upholstered Roller	1
BFM-11271	Knee Hold Down Handle	1
BFH-50622	Large Aluminum End Cap	4
BFP-52430	BHSCS 3/8" x 3/4"	4
BFP-51759	SHCS 3/8" x 2"	1
BFH-50204	3/8" Curved Washer	2
BFH-50157	3/8" Nylock	1

Step 21: ⚠ Make Sure All Bolts Are Tightened Before Moving On

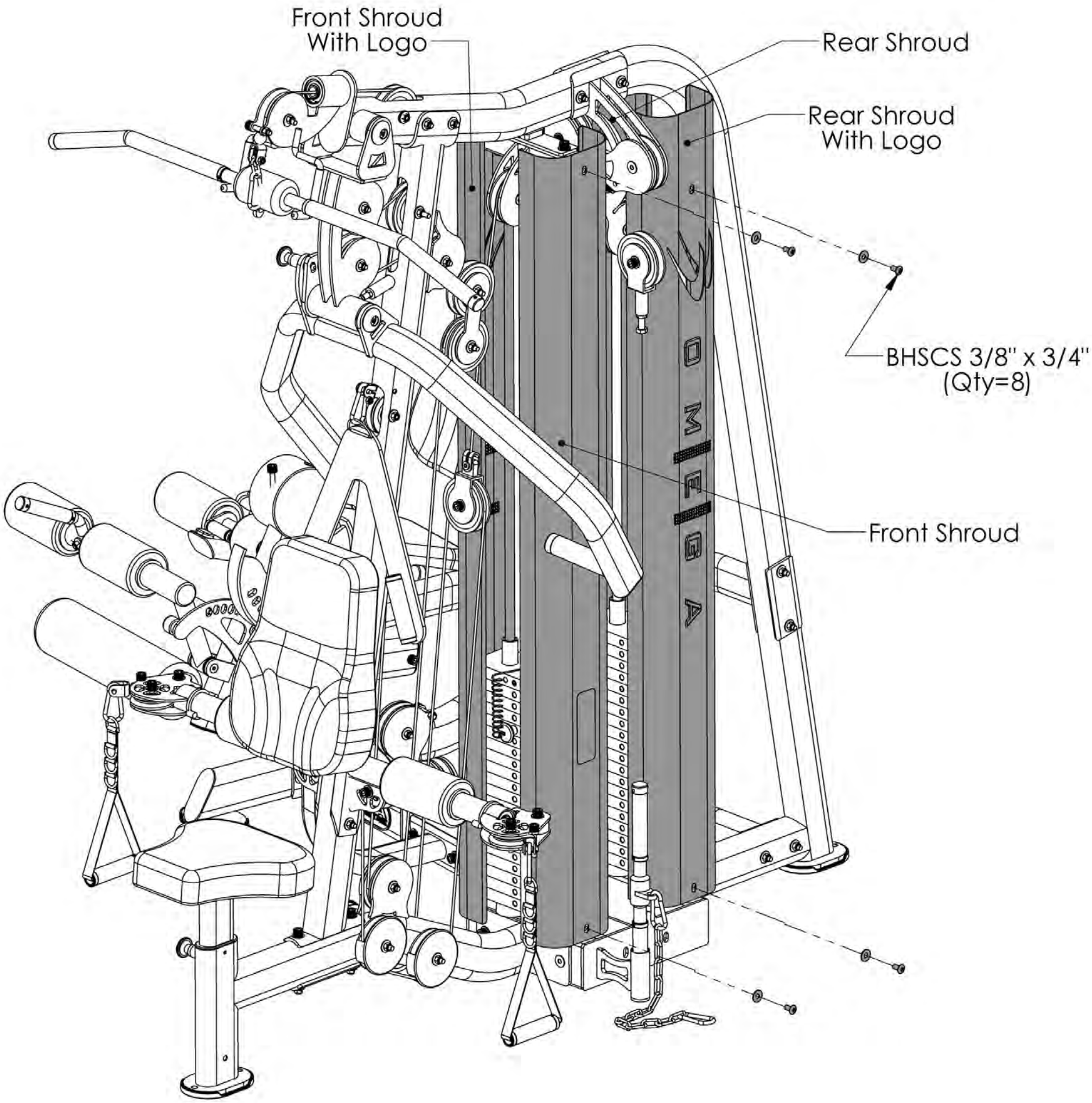

All Flat Washers and Nylocks are 3/8” unless otherwise noted.

Part #	Description	Qty
BFP-52267	Front Shroud with Logo	1
BFP-52269	Rear Shroud with Logo	1
BFP-52268	Front Shroud	1
BFP-52271	Rear Shroud	1
BFP-52430	BHSCS 3/8” x 3/4”	8
BFH-50146	3/8” Flat Washer	8

Leg Press Option

Step 22: ⚠ **This Section Is Only For Those Who Purchased the Leg Press Option. Make Sure All Bolts Are Tightened Before Moving On**

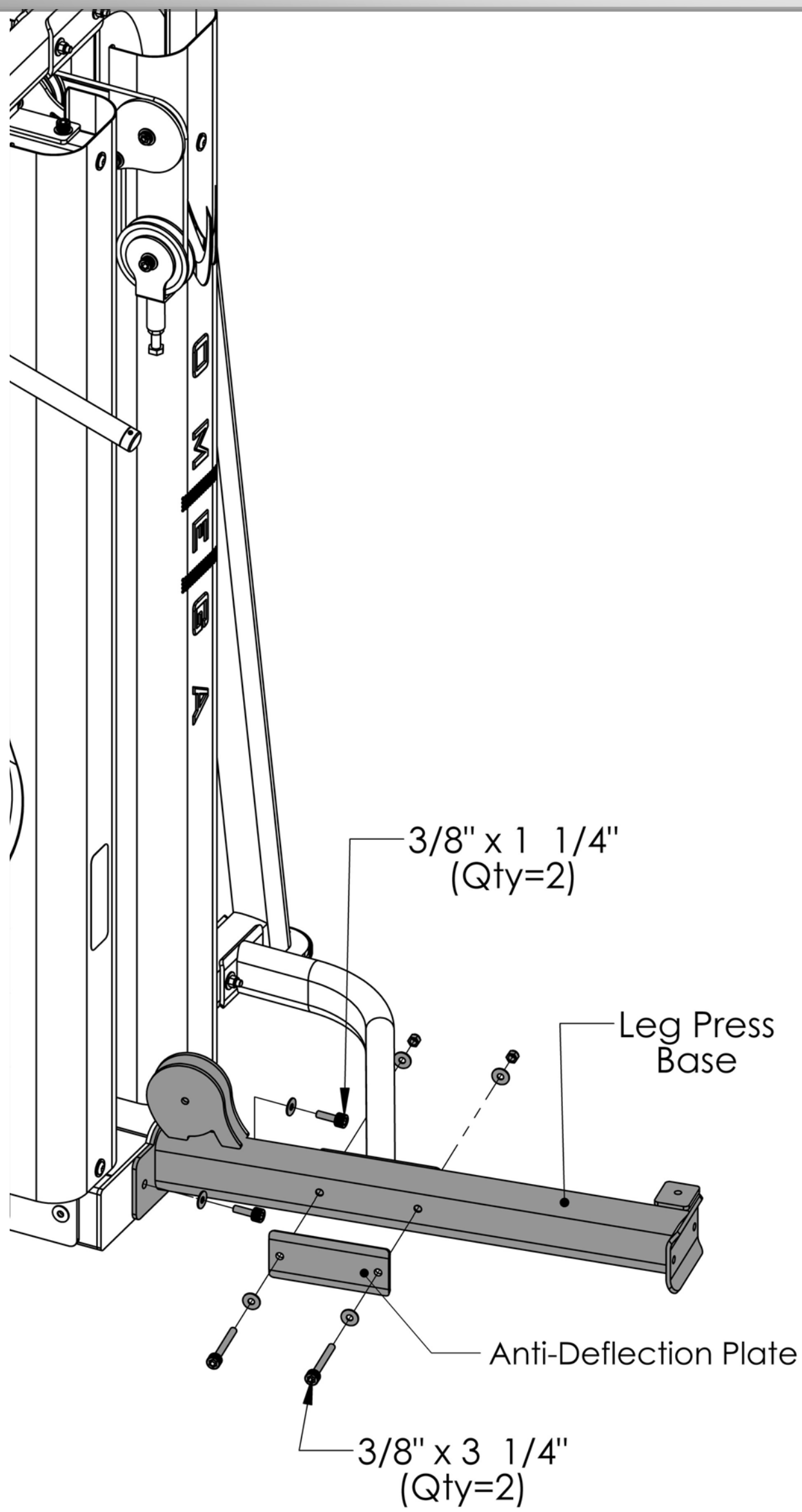

All Flat Washers and Nylocks are 3/8” unless otherwise noted.

Part #	Description	Qty
BFP-10981	Leg Press Base	1
BFP-52164	Anti-Deflection Plate	1
BFP-51653	SHCS 3/8” x 1 1/4”	2
BFP-51748	SHCS 3/8” x 3 1/4”	2
BFH-50146	3/8” Flat Washer	8
BFH-50157	3/8” Nylock	4

Step 23: ⚠ Make Sure All Bolts Are Tightened Before Moving On

Leg Press Pivot Arm
Four Arm (Qty=2)
Left Handle
Anti-Deflection Plate
Right Handle
3/8" x 3 1/4" (Qty=2)
Leg Press Frame
3/8" Curved Washer (Qty=4)
3/8" x 5" (Qty=2)

Note: ***ALL AXLES*** on this step have a Reverse Threaded hole on one end of the axle. This means to tighten the bolt, it will need to be turned counter clockwise (the opposite of a normal threaded bolt). Please match the corresponding bolt

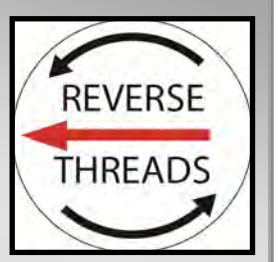

All Flat Washers and Nylocks are 3/8" unless otherwise noted.

Part #	Description	Qty
BFP-10982	Leg Press Frame	1
BFP-10860	Left Handle	1
BFP-10861	Right Handle	1
BFP-52159	Anti Deflection Plate	1
BFP-10851	Four Arm	2
BFP-10852	Pivot Arm	1
BFP-51748	SHCS 3/8" x 3 1/4"	2
BFP-51799	SHCS 3/8" x 5 "	2
BFH-50204	3/8" Curved Washer	4
BFH-50146	3/8" Flat Washer	4
BFH-50157	3/8" Nylock	4

Step 24: ⚠ Make Sure All Bolts Are Tightened Before Moving On

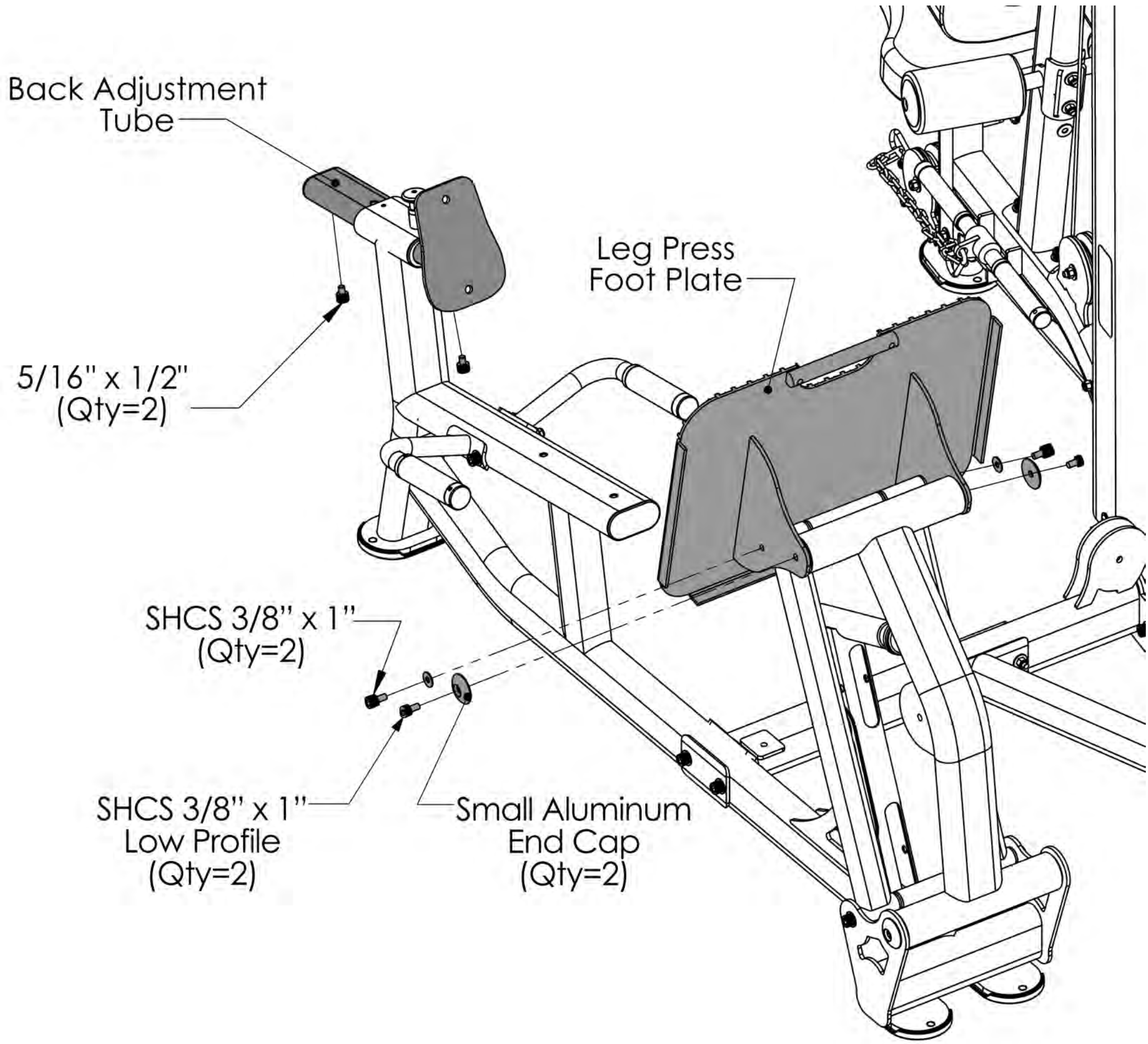

All Flat Washers and Nylocks are 3/8" unless otherwise noted.

Part #	Description	Qty
BFP-10853	Leg Press Foot Plate	1
BFP-10983	Back Chrome Adjustment	1
BFP-51696	Small Aluminum End Cap	2
BFP-52430	SHCS 5/16" x 1/2"	2
BFP-52376	SHCS 3/8" x 1"	2
BFH-50665	SHCS 3/8" x 1 - Low Profile	2
BFH-50146	3/8" Flat Washer	2

Step 25: ⚠ Make Sure All Bolts Are Tightened Before Moving On

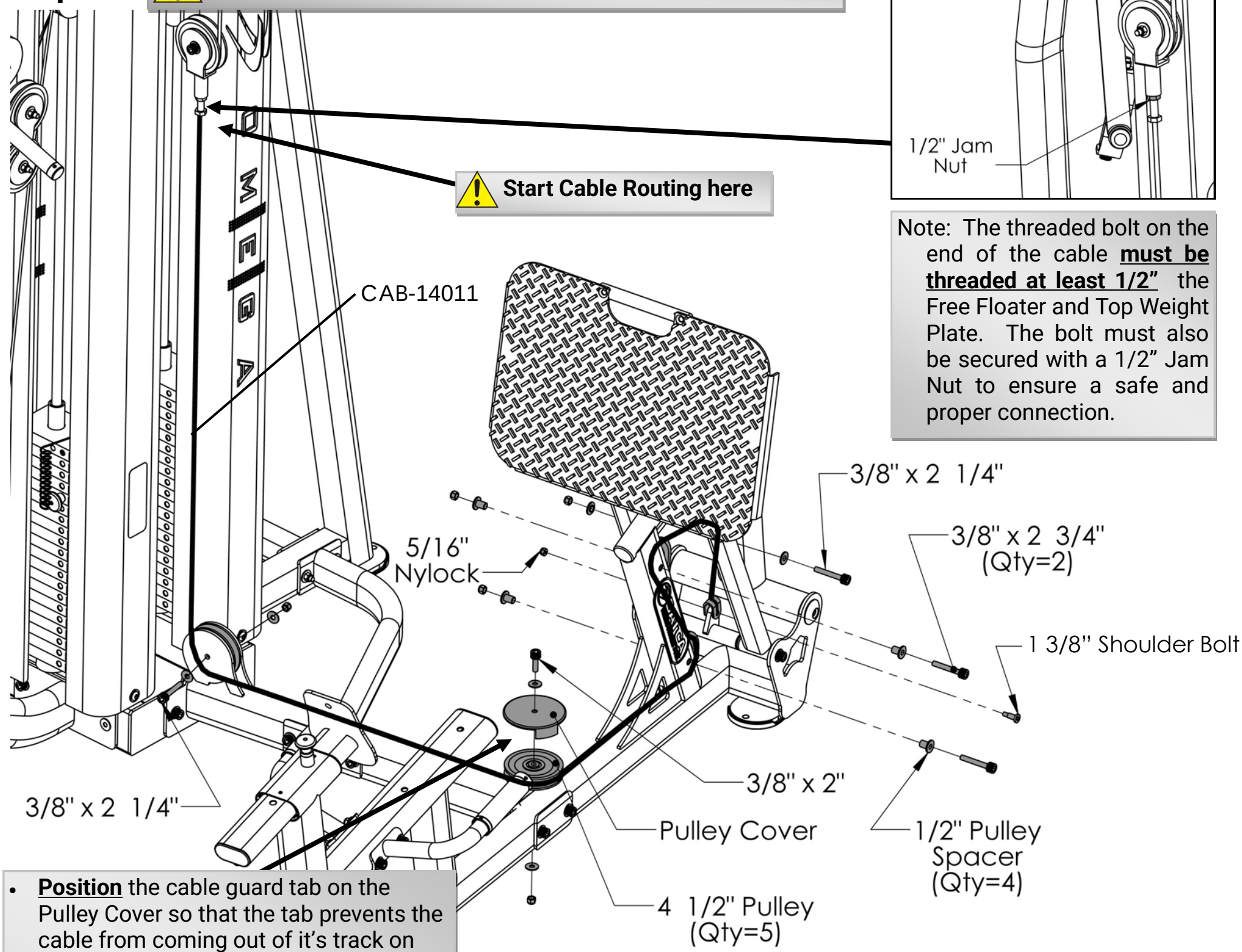

Note: The threaded bolt on the end of the cable **must be threaded at least 1/2"** the Free Floater and Top Weight Plate. The bolt must also be secured with a 1/2" Jam Nut to ensure a safe and proper connection.

- **Position** the cable guard tab on the Pulley Cover so that the tab prevents the cable from coming out of it's track on the 4 1/2" Pulley. An example of this positioning can be seen in the figure below. The cable guard tab should be positioned so that it is in the middle of the cable wrap on the 4 1/2" Pulley, between points "A" and "B". This will allow better protection and prevent the cable from rubbing the cable guard tab.

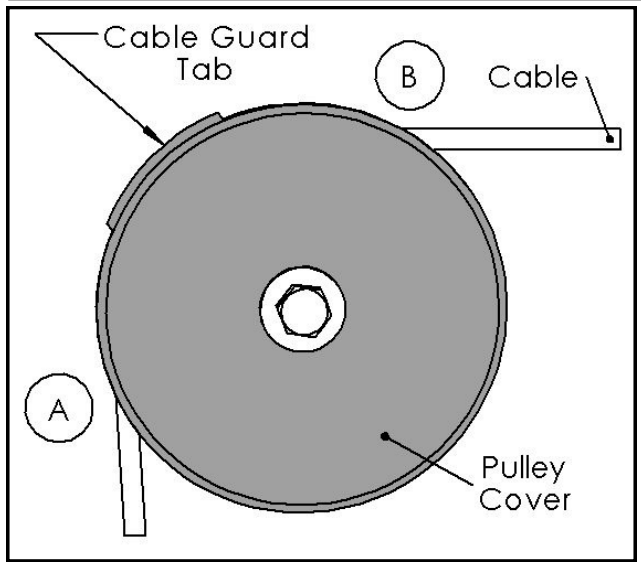

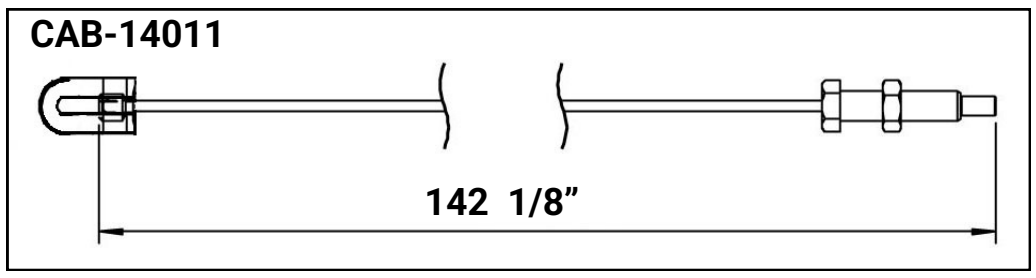

All Flat Washers and Nylocks are 3/8" unless otherwise noted.

Part #	Description	Qty
CAB-14011	Free Floater to Cable Lockout	1
BFM-50345	Pulley Cover	1
BFH-50174	4 1/2" Pulley	5
BFP-51746	1/2" Pulley Spacer	4
BFH-50351	1 3/8" Shoulder Bolt	1
BFP-51759	SHCS 3/8" x 2"	1
BFP-51752	SHCS 3/8" x 2 1/4"	2
BFP-51750	SHCS 3/8" x 2 3/4"	2
BFH-50267	5/16" Nylock	1
BFH-50146	3/8" Flat Washer	6
BFH-50157	3/8" Nylock	5

Step 26: ⚠ Make Sure All Bolts Are Tightened Before Moving On

Back Pad
With Lumbar

3/8" x 1 1/4"
(Qty=2)

3/8" Lock
Washer
(Qty=4)

Large
Bottom
Pad

3/8" x 3"
(Qty=2)

Part #	Description	Qty
BFU-10189	Back Pad With Lumbar	1
BFU-10188	Large Bottom Pad	1
BFP-51653	SHCS 3/8” x 1 1/4”	2
BFP-51747	SHCS 3/8” x 3”	2
BFH-50147	3/8” Lock Washer	4
BFH-50146	3/8” Flat Washer	4

All Flat Washers and Nylocks are 3/8” unless otherwise noted.

Weight Stack Decals:

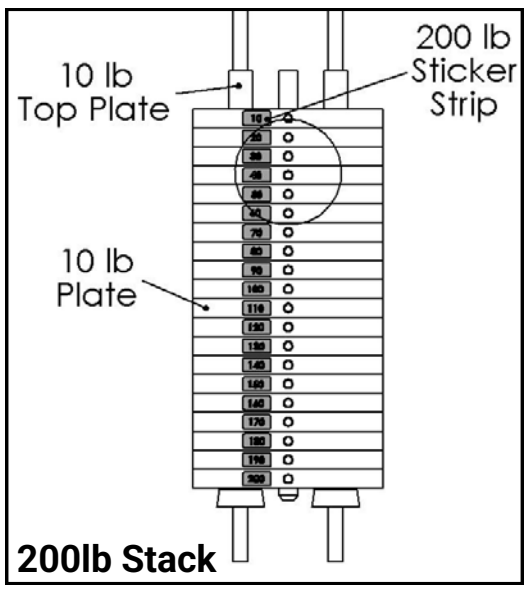

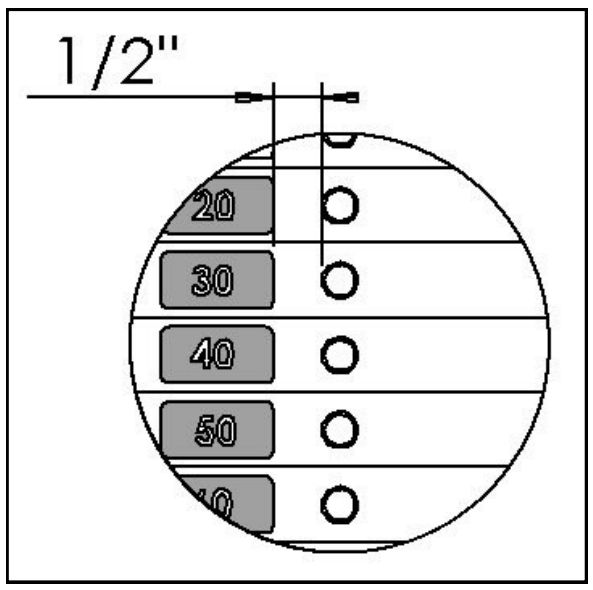

The weight stack decals should be installed with a gap of 1/2” between the edge of the decals and the side of the holes for the weight stack pin. This spacing is critical because a larger gap between the decal and the center pin hole could result in the weight stack decals being covered by shrouds. It is helpful to use a 1” strip of painters tape to install the decals straight by lining up the edge of the piece of tape with the center of the hole in the plates and use the other side of the tape as a guide for applying the decals. The stacks shown in the diagram above are our standard 200 lb weight stacks where all 20 plates are 10lbs. The decals used for the standard weight stack should be labeled 10-200. If the medical 175 lb weight stacks were purchased, the top five plates will be 5 lbs. The decals used for the medical weight stacks should be labeled 5-175 and are typically packaged with the weight stacks themselves.

IMPORTANT - Check These Components Before Using Gym:

- Each Cable with a threaded bolt on either end **must be threaded at least 1/2”** into its attachment, whether it be a Free Floater, Lockout Free Floater, or the Top Plate of the weight stack. Each must also be secured with a 1/2” Jam Nut to ensure a safe and proper connection.

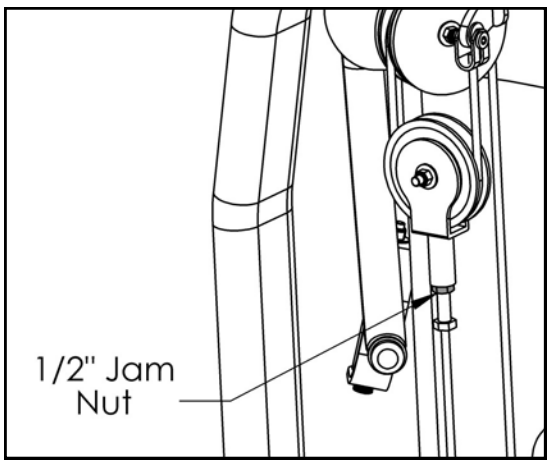

Free Floater

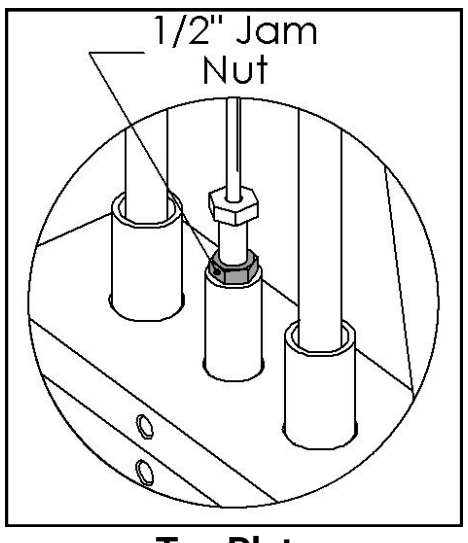

Top Plate

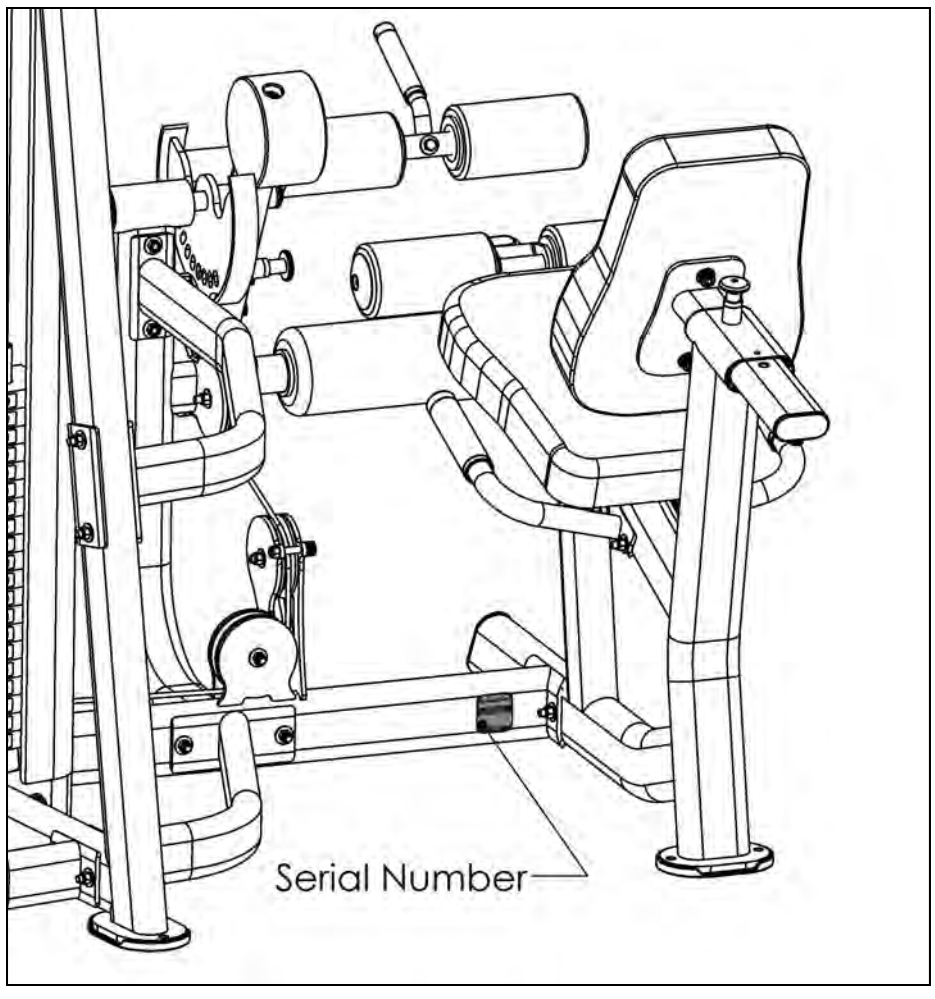

- **Record** your serial number on the front of this manual and keep for your records. The serial number can be found back of the Leg Extension/Leg Curl Base as shown in the figure to the left.

Guide Rod

- Clean guide rods with a lint-free cloth and apply a thin layer of silicone lubricant (Part # BFH-50262) to each guide rod. This will ensure a glass smooth performance from your weight stack.

Cable Adjustments

- **Adjust** cables to proper tension from any of the locations shown below.

Note: All cables with threaded adjustable ends must have at least 1/2" of the threads threaded in to its counterpart. It is very important that the 1/2" Jam Nut be wrench tightened to the counterpart to ensure that the threaded adjustable end of the cable does not back out of its counterpart.

- **Note:** If the top plate raises off of the second plate in the weight stack, then the cable tension is too tight. You will need to take some of the tension out to lower the Top plate flush with the second plate.

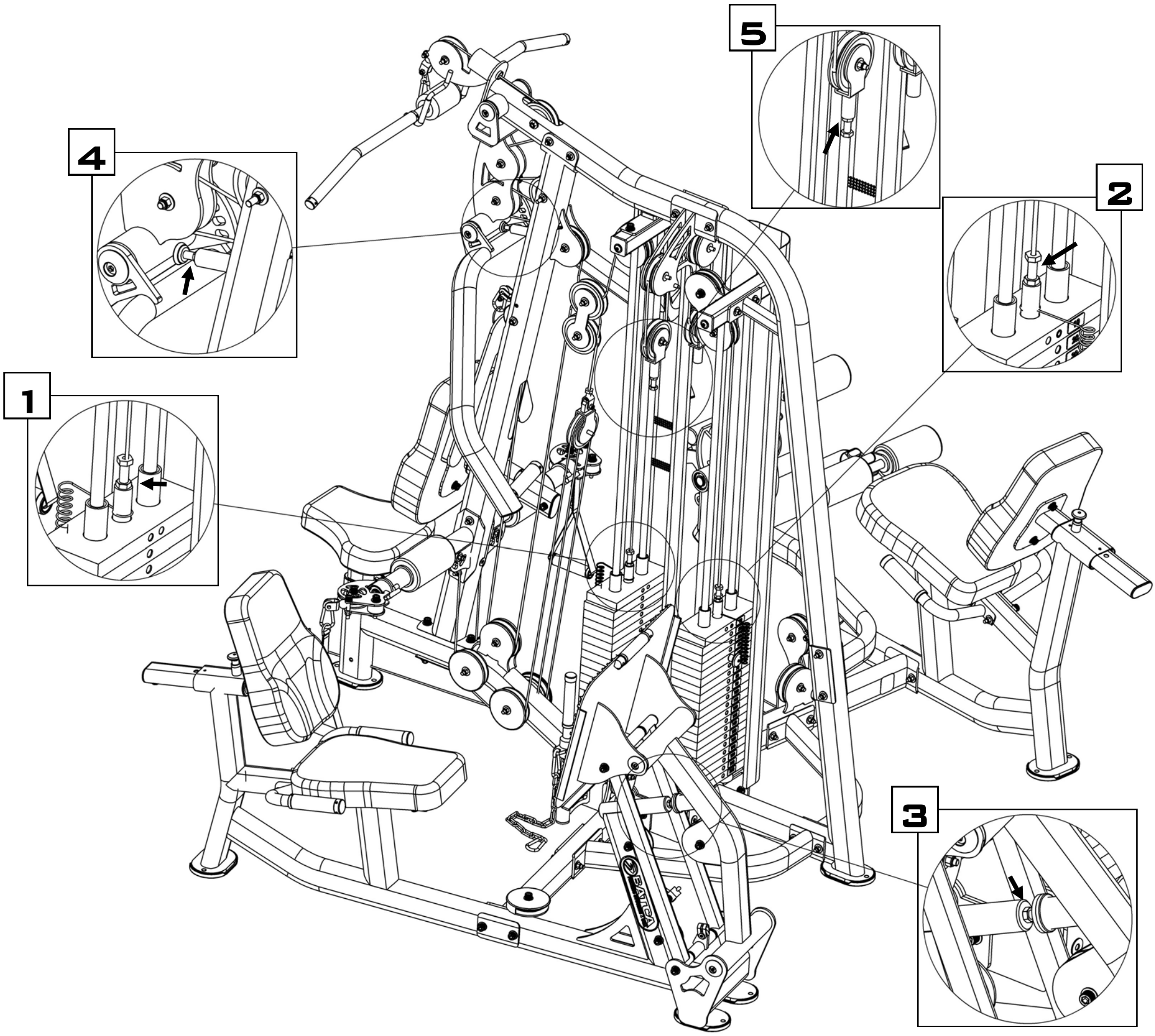

Preventive Maintenance

Batca Fitness Systems strives to give you the very best in quality, performance and safety through carefully engineered designs and excellent workmanship. In order to maintain this high level of quality the preventative maintenance schedule below should be followed.

Clean upholstery, grips, and roller pads with mild soap and water generally after every use. The guide rods, chrome slides and frame should be cleaned with a cotton cloth. Upon cleaning the guide rods, a thin layer of Silicone or Teflon gel should be applied to each rod to ensure a glass smooth performance.

An overall inspection should be done before each workout. If the warning and safety decals are worn or have been removed they should be replaced immediately. The cables and cable systems should be inspected for signs of wear and proper tension. In order to check cables properly you should carefully run the cable through your fingertips, checking for signs of wear, cracks, burs and thinning spots. Replace any part at first signs of wear. Cables should be adjusted for proper tension. See assembly instructions for this detail. All hardware, stops, and adjustments should be checked and tightened as required.

The guide rods on your machine should be cleaned and lubricated regularly. This will ensure a glass smooth performance from your weight stack. A thin layer of either Silicone or Teflon gel should applied to each rod.

Although cables should be inspected daily, it is important that ALL cables be replaced as directed in the schedule below. Please note that at any first sign of wear the cable should be replaced immediately.

If there are any questions concerning maintenance, please contact your local Batca dealer or contact Batca Fitness Systems directly at:

Batca Fitness Systems
(919) 255-1233
www.batcafitness.com

	Daily		**Weekly**		**Monthly**		**Quarterly**		**Years**	
	Commercial	Home	Commercial	Home	Commercial	Home	Commercial	Home	Commercial	Home
Clean										
Upholstery	X			X						
Hand Grips	X			X						
Roller Pads	X			X						
Guide Rods			X			X				
Chrome Slides			X			X				
Frame			X			X				
Inspect										
Overall	X	X								
Safety Decals	X	X								
Cables	X	X								
Cable Tension			X			X				
Pulleys	X	X								
Hardware	X	X								
Stops	X	X								
Upholstery	X	X								
Hand Grips			X			X				
Frame			X			X				
Bushings	X			X						
Bearings	X			X						
Lubricate										
Guide Rods			X			X				
Bearings			X				As Needed			1
Replace										
Cables									1	3

Limited Lifetime Warranty

What is covered

For Residential Use:

Batca Fitness Systems warrants all of its products against defects in manufacturing, materials and workmanship under normal use and service for one year from date of purchase including paint, chrome, upholstery and grips. Batca Fitness Systems also warrants all cables, belts, bolts, nuts, caps, plugs, bumpers, washers, levelers, decals, gas springs and other hardware for three years after date of purchase; all moving parts, including pulleys, bushings, bearings and pull pins for five years after date of purchase and warrants the frame and all welded parts for the lifetime of the original purchaser.

For Commercial Use:

Batca Fitness Systems warrants all of its products against defects in manufacturing, materials and workmanship under normal use and service for six months from date of purchase including paint, chrome, upholstery and grips. Batca Fitness Systems also warrants all cables, belts, bolts, nuts, caps, plugs, bumpers, washers, levelers, decals, gas springs and other hardware for one year after date of purchase; all moving parts, including pulleys, bushings, bearings and pull pins for three years after date of purchase and warrants the frame and all welded parts for ten years after date of purchase.

What is not covered

This warranty does not cover damage, which results from shipping, misuse, abuse, neglect, carelessness, modification or alteration, accident, fire, flood, “acts of God” or other contingencies beyond the control of Batca Fitness Systems. This warranty also does not cover deterioration from wear and tear or exposure or any defect, which would not have happened if instructions in the owner’s manual had been followed. Improper installation, improper assembly or follow-up maintenance along with installation of parts or accessories not originally intended for products of Batca Fitness Systems are also not covered by this warranty. Only genuine Batca parts should be used for replacement, repair, and maintenance for this warranty to apply.

Defective parts will be repaired or replaced at Batca Fitness Systems option, without parts charge to the purchaser. All returns require a return authorization prior to acceptance of repair work. Batca Fitness Systems reserves the right to make design changes without any prior notification and shall not be responsible for incidental or consequential damages.

The purchaser is responsible for shipping the defective part back to the factory. Repair or replacement is the exclusive and sole remedy of the purchaser. Labor charges associated with parts changeovers are not covered by this warranty. Proof of purchase, serial number, model number and date of purchase will be required along with all pertinent information of the alleged damage.

This warranty applies only to the original purchaser and is not transferable. Claims under this warranty must be made directly to Batca Fitness Systems.

Batca Fitness Systems
1207 N. New Hope Road
Raleigh, NC 27610
(919) 255-1233

www.batcafitness.com

Please keep this for your records.

Scan the QR Code to register your new BATCA Product online!

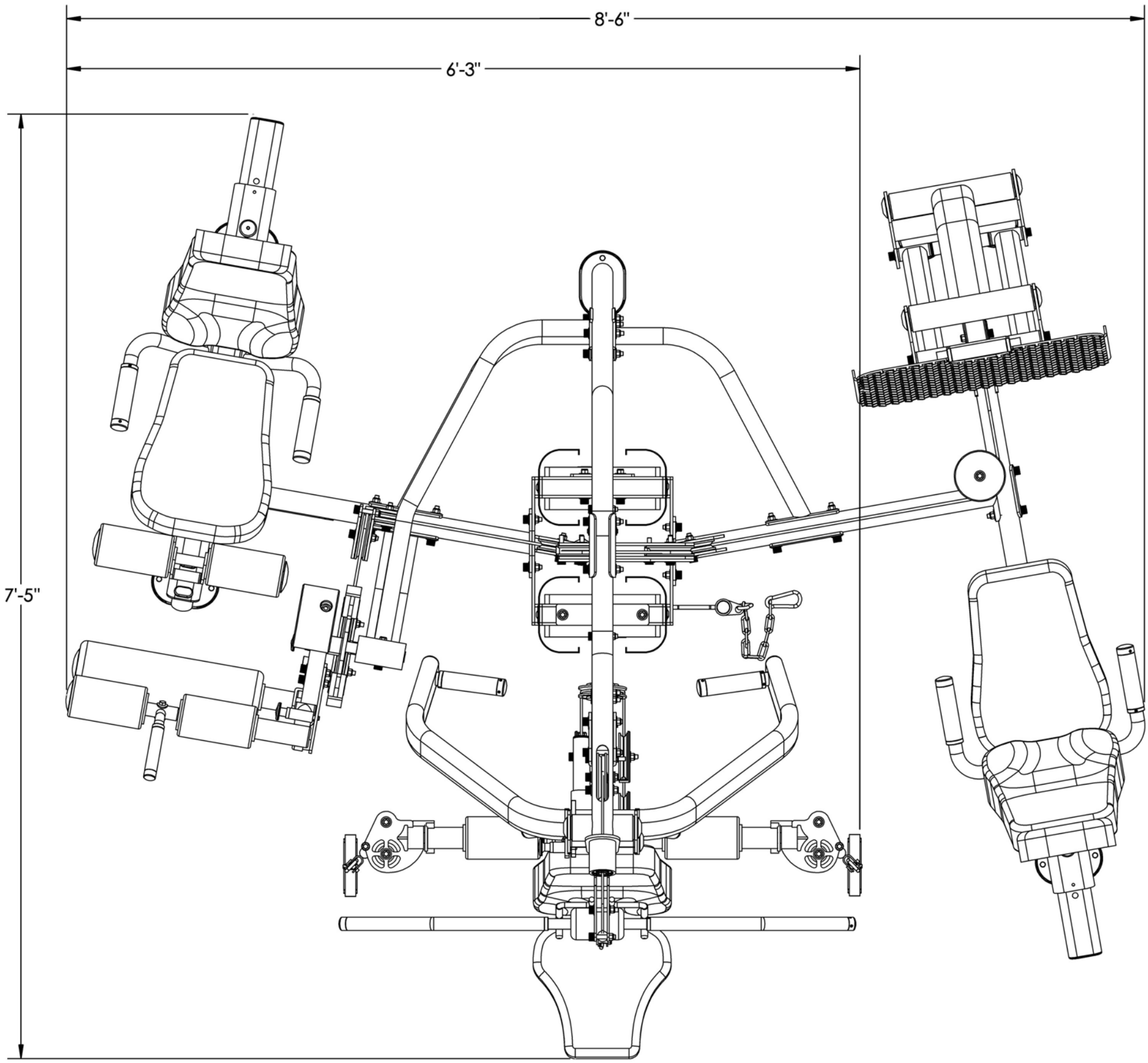

Layout Diagram

The Omega 2 without Leg Press has a layout dimension of 7’-5” (Length) x 6’-3” (Width) x 7’-0” (Height). The Omega 2 with Leg Press has a layout dimension of 7’-5” (Length) x 8’-6” (Width) x 7’-0” (Height). There should be minimum of 18”, preferably 24”, or working space around the entire unit.